KUBO PREFAB

KUBO PROJECT CASE

THREE-STOREY MODULAR ACCOMMODATION BUILDING

LOCATION	Confidential
PROJECT OWNERSHIP	KUBO
BUILDING	One three-storey modular accommodation building
APPROXIMATE FOOTPRINT	24.0 m x 13.9 m
VISIBLE ROOM COUNT	40 rooms across the floor layouts
DRAWING SCOPE	Layouts, elevations, roof, stairs, module parts, sanitary

NOTE:

1. 图中尺寸均以毫米计。
1. The Dimensions Are In Millimeters.
2. 图中尺寸仅供参考，安装时可根据实际情况稍作调整。
2. The Dimensions In The Figure Are For Reference, And Can Be Adjusted Slightly According To Actual Conditions During Installation.
3. 此图为公共卫浴内部按安装图。
3. This Is A Standard Installation Drawing For Public Bathroom.

公共洗浴间管道参考此图
Piping Installion For Public Bathroom Reference

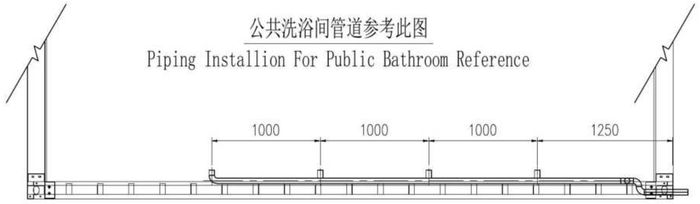

SECTION B

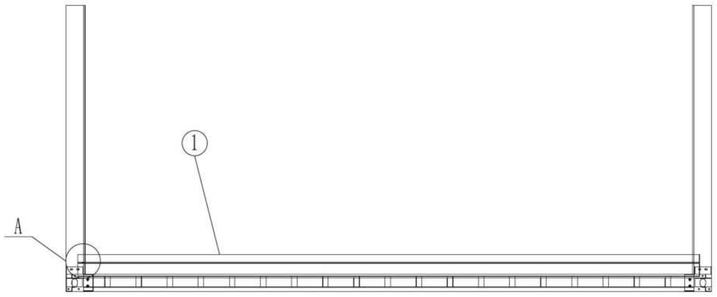

SECTION A

公共厕所管道参考此图
Piping Installion For Public Toilets Reference



SECTION B

污水槽卡条
Fixed Positioning Of Sewage Tank

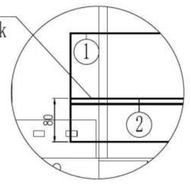

Detail A

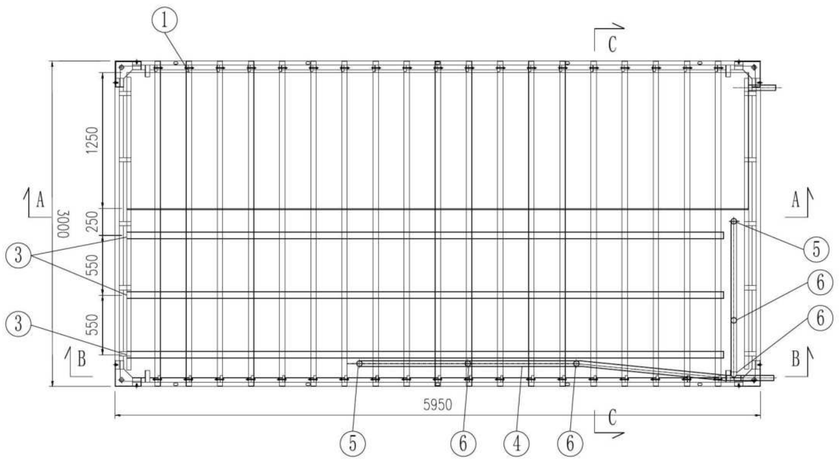

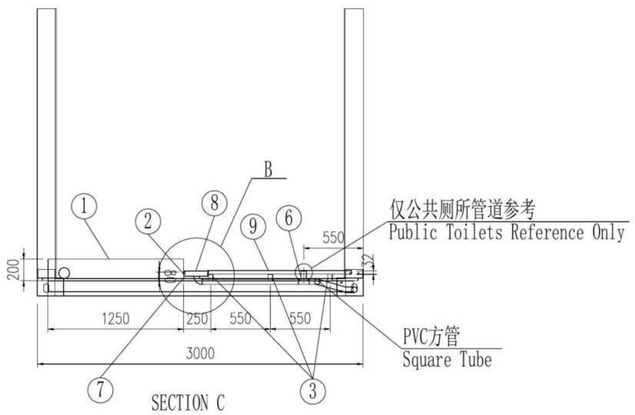

SECTION C

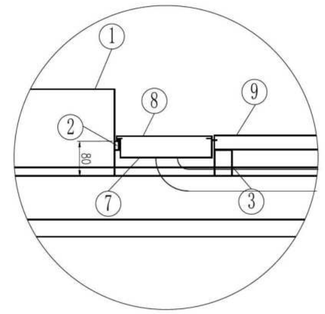

Detail B

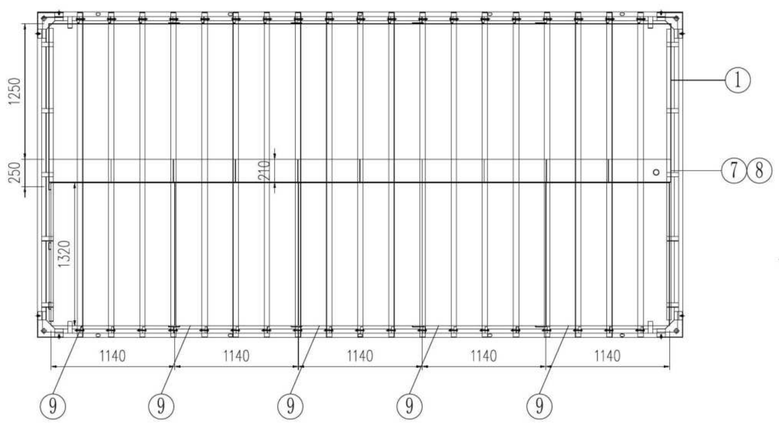

地板安装图
Floor Panel Installation Diagram

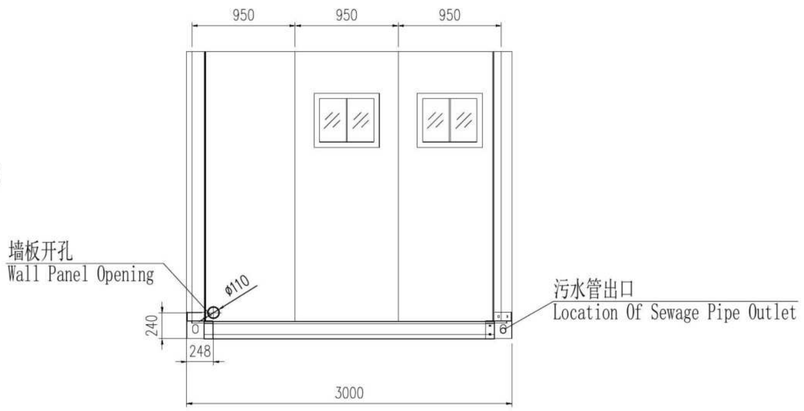

RIGHT VIEW

NO.	Item	Descriptiones	Quantity	Unit
1	卫浴模块底盘 Bathroom Integrated Base	5730*1250*200	1	set
2	方钢 Square Steel	已预装 Preinstalled		
3	方钢 Square Steel	5500*60*40	3	set
4	PVC管 PVC Pipe	50mm	5.5	m
5	PVC弯头 PVC Elbow	50mm	4	set
6	PVC 三通 PVC Tee	50mm	5	set
7	污水槽 Drainage Channel	5730*210*40	1	set
8	污水槽盖板 Drainage Channel Cover	-	10	set
9	拼装地板 Floor Panel	5730*210*40	5	pc.

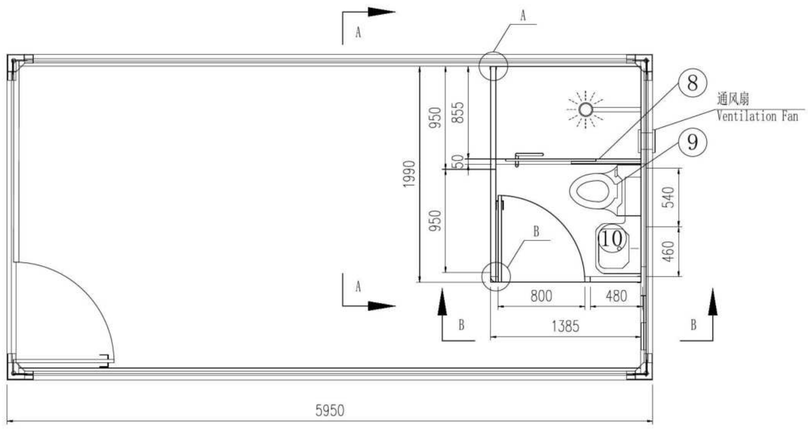

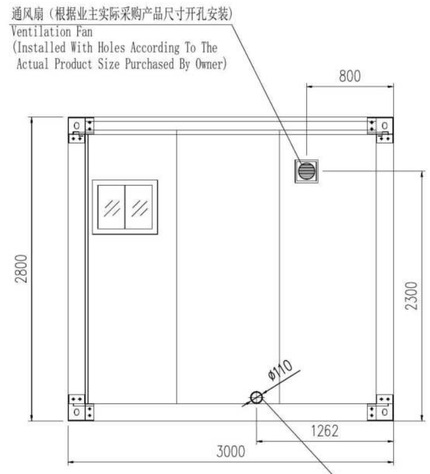

RIGHT VIEW

根据卫生间集成底座实际下水管位置开孔，尺寸仅供参考。
According To The Actual Position Of The Drainage Pipe On The Integrated Base Of The Bathroom, Dimension For Reference Only.

NOTE:

1. 图中尺寸均以毫米计。
1. The Dimensions Are In Millimeters.
2. 图中尺寸仅供参考，安装时可根据实际情况稍作调整。
2. The Dimensions In The Figure Are For Reference, And Can Be Adjusted Slightly According To Actual Conditions During Installation.
3. 此图为独立卫浴内部按安装图。
3. This Is A Standard Installation Drawing For Private Bathroom.

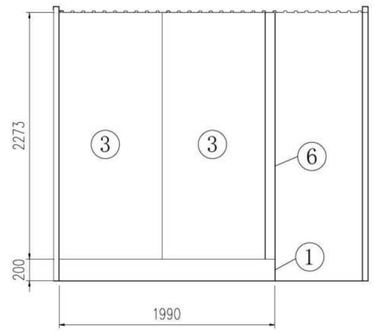

SECTION A

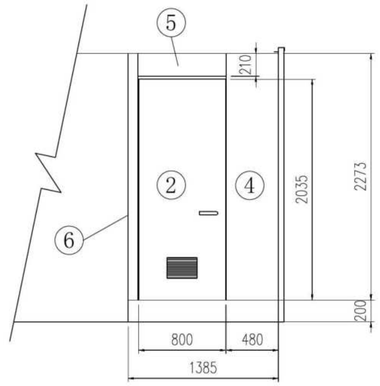

SECTION B

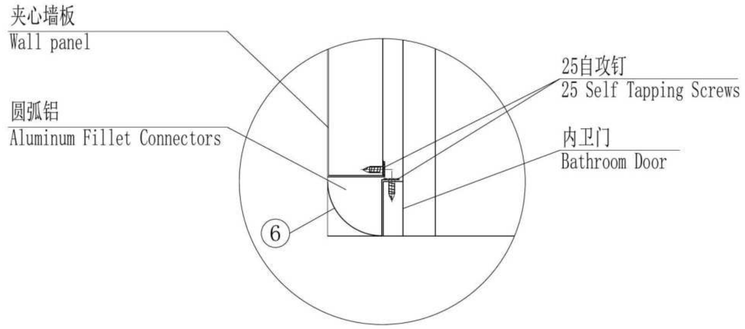

B放大
Detail B

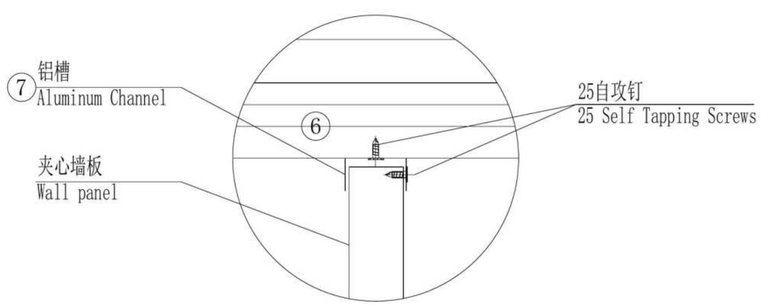

A放大
Detail A

NO.	Item	Descriptiones	Quantity	Unit
1	卫浴模块底盘 Bathroom Integrated Base	1990*1380*200	1	set
2	内卫门 Bathroom Door	800*2035	1	set
3	墙板 Wall Panel	950*2300	2	set
4	墙板 Wall Panel	480*2300	1	set
5	门头板 Door Head Panel	210*870	1	set
6	圆弧铝 PVC Elbow	2350mm	1	set
7	铝槽 Aluminum Channel	3000mm	2	set
8	玻璃推拉门 Glass Sliding Door	-	1	set
9	马桶 Toilet	-	1	set
10	洗手盆 Wash Basin	-	1	pc.

图示 LEGEND	数量 QUANTITY	图示 LEGEND	数量 QUANTITY
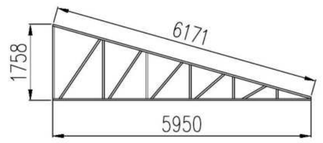 ST1-1	2	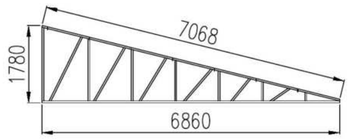 ST1-4	10
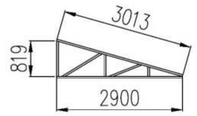 ST1-2	4	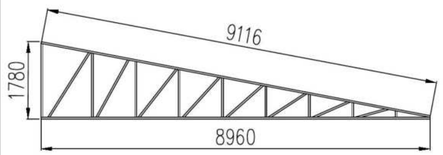 ST1-5	4
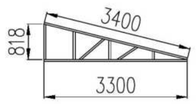 ST1-3	4		

主框架用M25*4.2自攻钉固定到箱体主框架上
Use M25*4.2mm self-tapping screws to fix the main frames of the roof to the main frames of container house.

两片梁背对背用M10*25螺栓链接固定
UseM10*25mm bolts to fix two pieces of the beams back to back

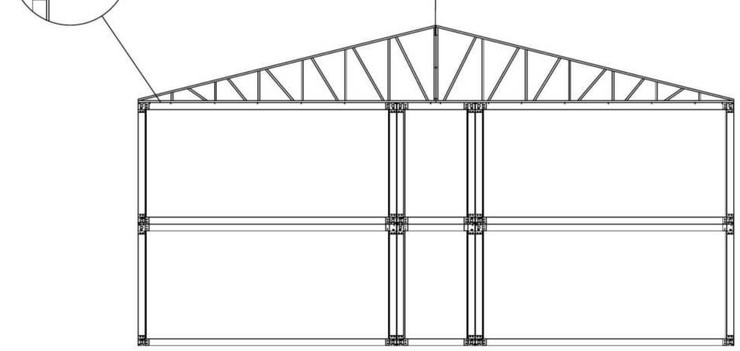

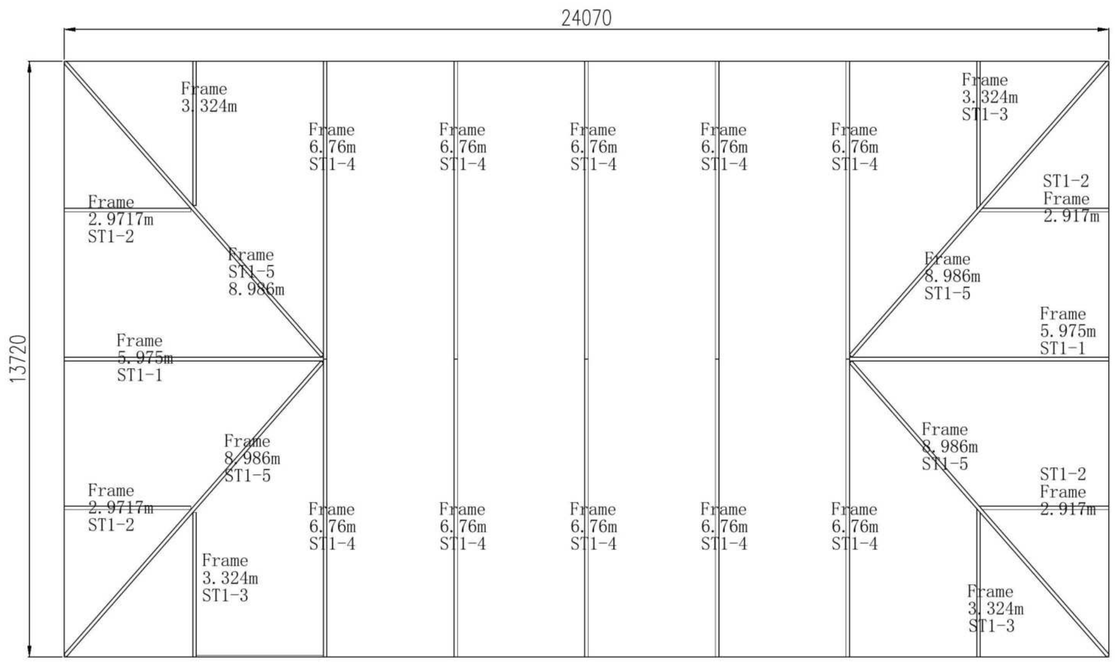

屋架布置

Layout of the Roof Frame

说明
1、把两片ST1-4梁用M12*25螺栓连接，并用M4.5*25自攻钉固定到快拼箱顶梁上，位置如图所示
2、把ST1-1、ST1-5放置在如图位置，底边用M4.2*25自攻钉固定在快拼箱顶梁上，并用M4.2*75自攻钉连接在ST1-4梁上
3、把ST1-2、ST1-3放置在如图位置，底边用M4.2*25自攻钉固定在快拼箱顶梁上，并用M4.2*75自攻钉连接在ST1-5梁上
注意：所有梁边缘与箱子齐平

Remark:
1.Use M12*25mm bolts to connect two pieces of the beams ST1-4, then use M4.5*25mm self-tapping screws to fix them on the top beams of the container house;

2.Place ST1-1, ST1-5 in the right places, use M4.2*25mm self-tapping screws to fix them on the top beams of the container house, then use M4.3*75mm self-tapping screws to fix with the beams ST1-4;

3.Place ST1-1, ST1-3 in the right places, use M4.2*25mm self-tapping screws to fix them on the top beams of the container house, then use M4.3*75mmself-tapping screws to fix with the beams ST1-5;

Note:
All the beams must be lined up with the container house.

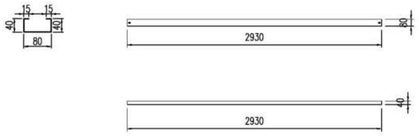

檩条示意

Purlins Details

编号 No.	尺寸 SIZE	数量 QUANTITY	编号 No.	尺寸 SIZE	数量 QUANTITY
ST2-1	L=2930	80	ST2-11	L=1459	4
ST2-2	L=3350	16	ST2-12	L=1220	4
ST2-3	L=3329	4	ST2-13	L=1026	4
ST2-4	L=2957	4	ST2-14	L=845	4
ST2-5	L=2912	4	ST2-15	L=493	4
ST2-6	L=2938	4	ST2-16	L=374	4
ST2-7	L=2424	4			
ST2-8	L=2066	4			
ST2-9	L=1991	4			
ST2-10	L=1692	4			

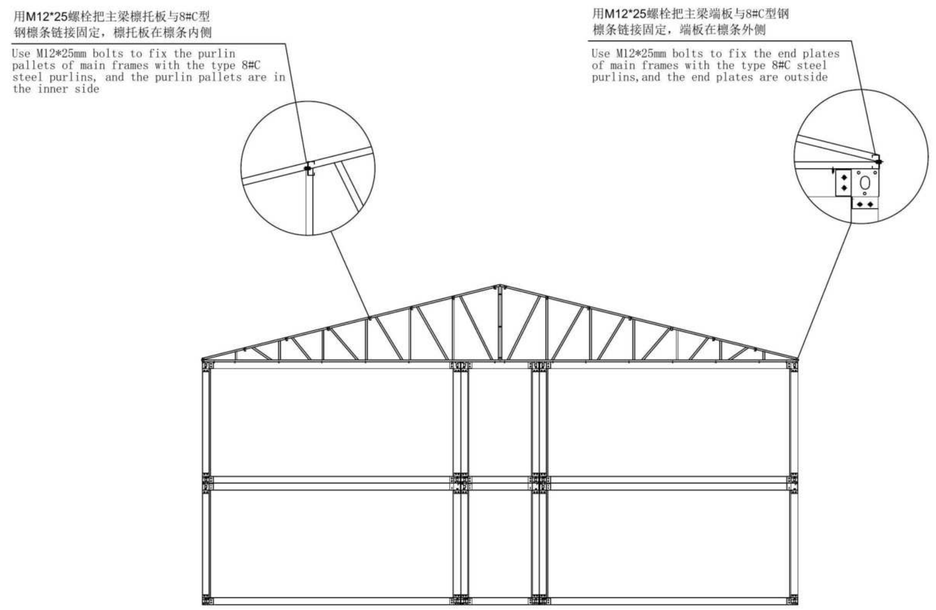

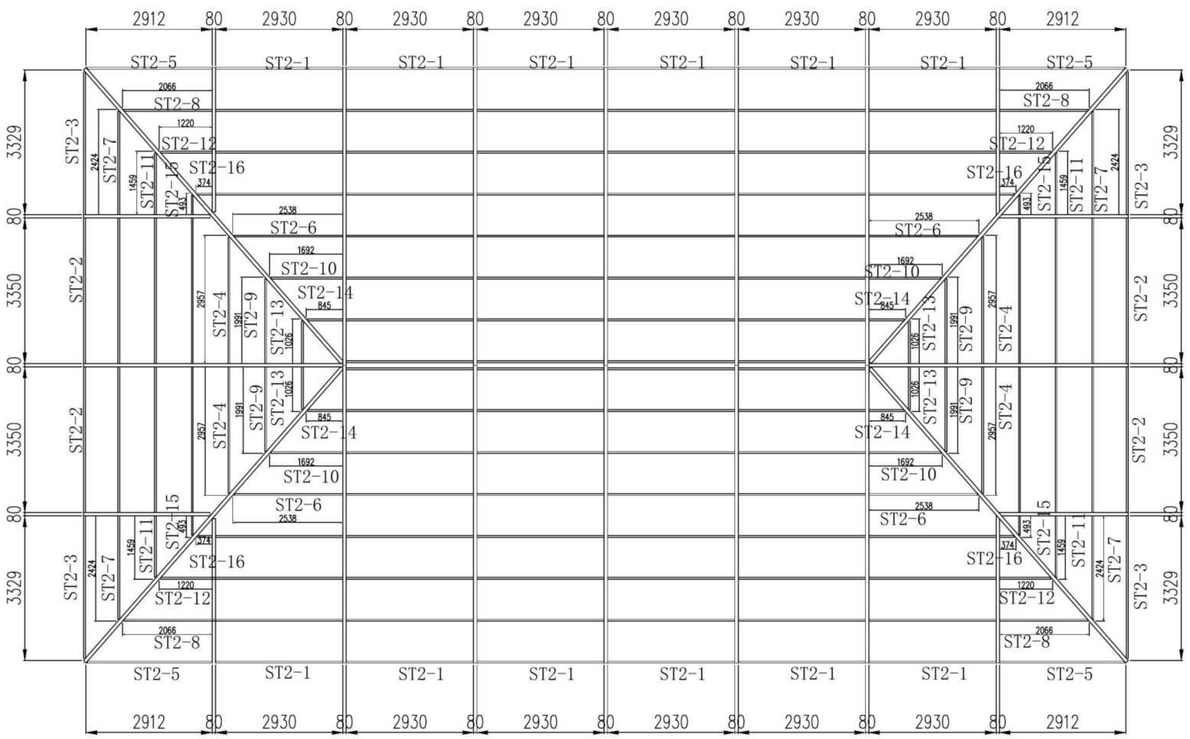

檩条布置

Layout of the Purlins

说明

1、把所有8#C型钢檩条用M12*25螺栓固定在如图所示位置。

Remark:

1.Use M12*25mm bolts to fix all the type 8#C steel purlins to the right places, refer to the legend left.



ST4 天沟示意

ST4 Rain Gutter Details

编号 No.	尺寸 SIZE	数量 QUANTITY
ST4	L=3650	22

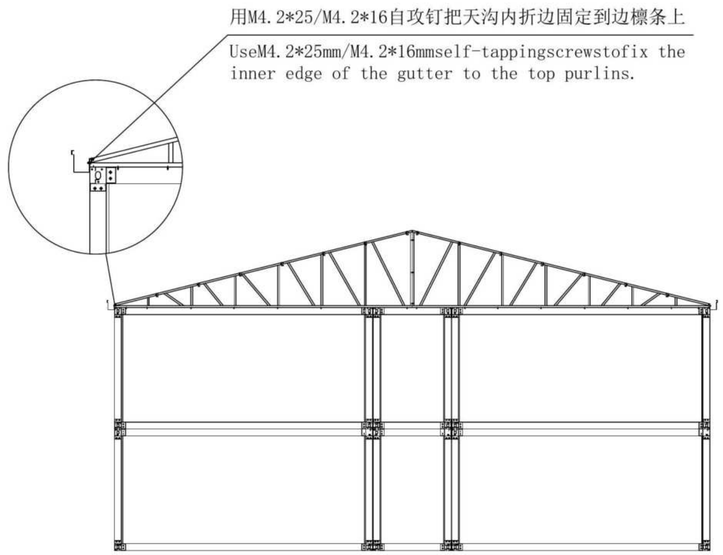

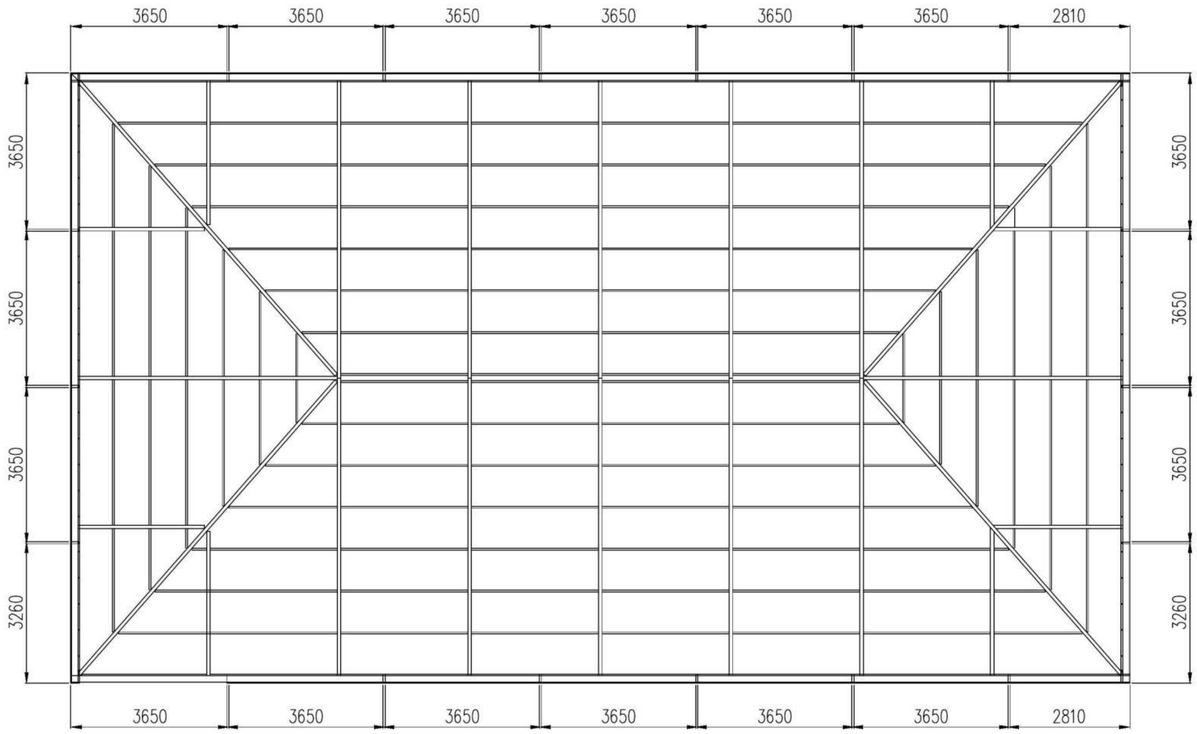

屋顶布置图

Layout of the Roof

说明

1、把折件天沟用M4.2*25/M4.2*16自攻钉固定在边檩条上。
2、天沟与天沟之间交接5cm，交接处需在内部用结构胶覆盖，
3、每段最后一支天沟需要切割，切割尺寸以实际搭建为准。

Remark

1. Use M4.2*25mm/M4.2*16mm self-tapping screws to fix the folding parts of the gutter to the edge purlins.
2. Each two gutters should be overlapping with 5cm, the overlapping parts should be filled with sealant to fix.
3. The last piece of gutter should be cut into the right size based on the actual situation for each side.

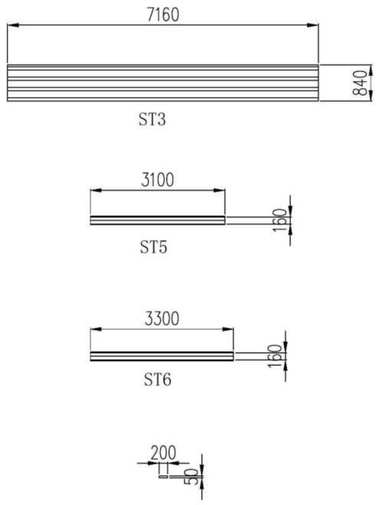

天沟链接件

Rain Gutter Assemble Parts

编号 No.	尺寸 SIZE	数量 QUANTITY
ST3	7160*840	62
ST5	3100*160	4
ST6	3300*160	12

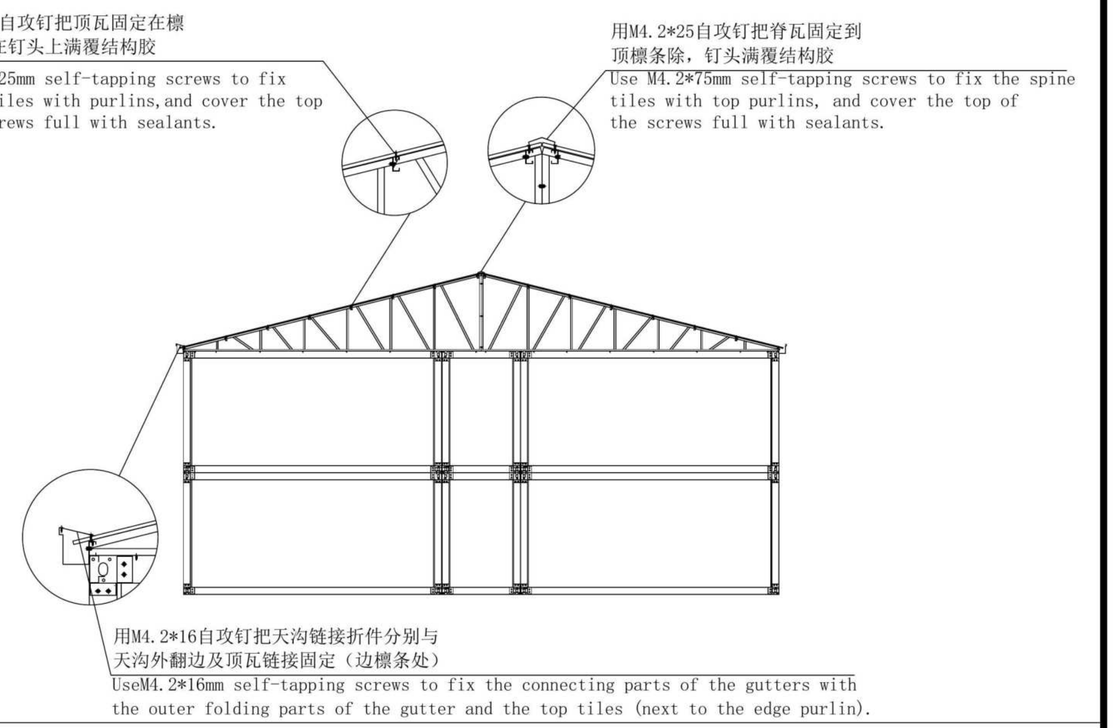

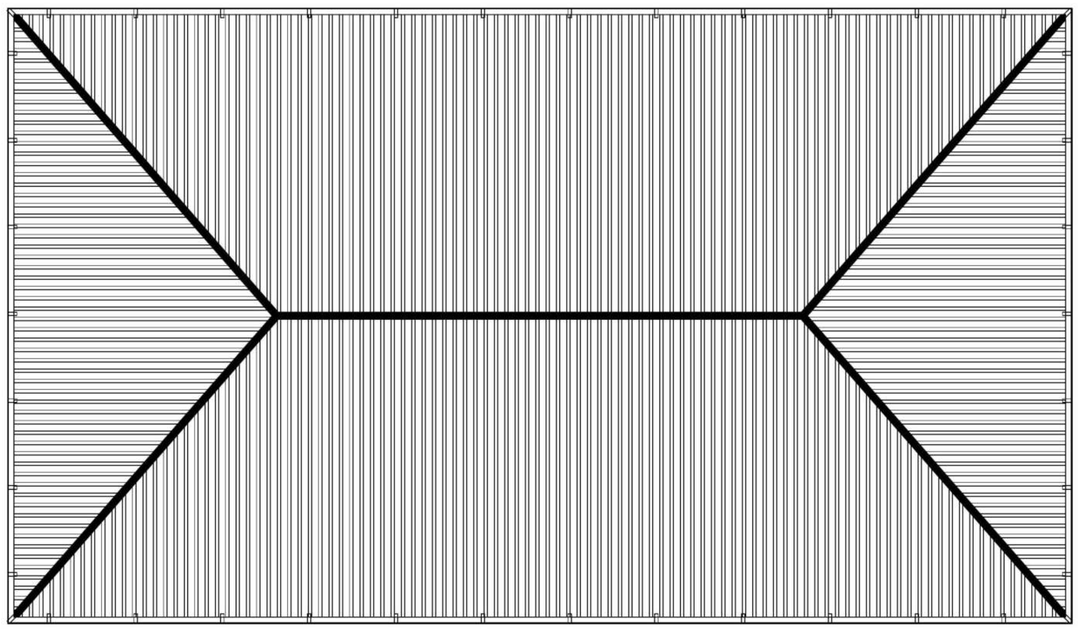

屋顶布置图

Layout of the Roof

说明
1、把顶瓦用M4.2*25自攻钉固定到檩条上，每张瓦每道檩条至少需要固定三颗顶，钉头上需要满覆结构胶。
2、两侧扇面及正反面边角瓦切割如图所示，建议尺寸以实际搭建尺寸为准。
3、把天沟连接折件用M4.2*16自攻钉分别固定在天沟外翻边及顶瓦（边檩条位置）上
4、把脊瓦折件用M4.2*75自攻钉固定在顶瓦(顶檩条位置)上，钉头需满覆结构胶。中屋脊使用ST5脊瓦，脊瓦相交5CM左右，四边屋脊使用ST6脊瓦，脊瓦相交5CM左右

Remark
1.Use M4.2*25mm self-tapping screws to fix the top tiles with the purlins, at least 3 screws are used for each tile and purlin, cover the top of the screws full with sealants.
2.The four sides of the top tiles should be cutting by actual needs.
3.Use M4.2*16mm self-tapping screws to fix the connecting parts of the gutters with the outer folding parts of the gutter and the top tiles (next to the edge purlin).
4.Use M4.2*75mm self-tapping screws to fix the spine tiles with top purlins, and cover the top of the screws full with sealants. ST5 are used for the middle top spine tiles, each two tiles should be overlapping with around 5CM. ST6 are used for the fours sides of the spine tiles, each two tiles should be overlapping with around 5CM.

背坡面

Back side of the Roof

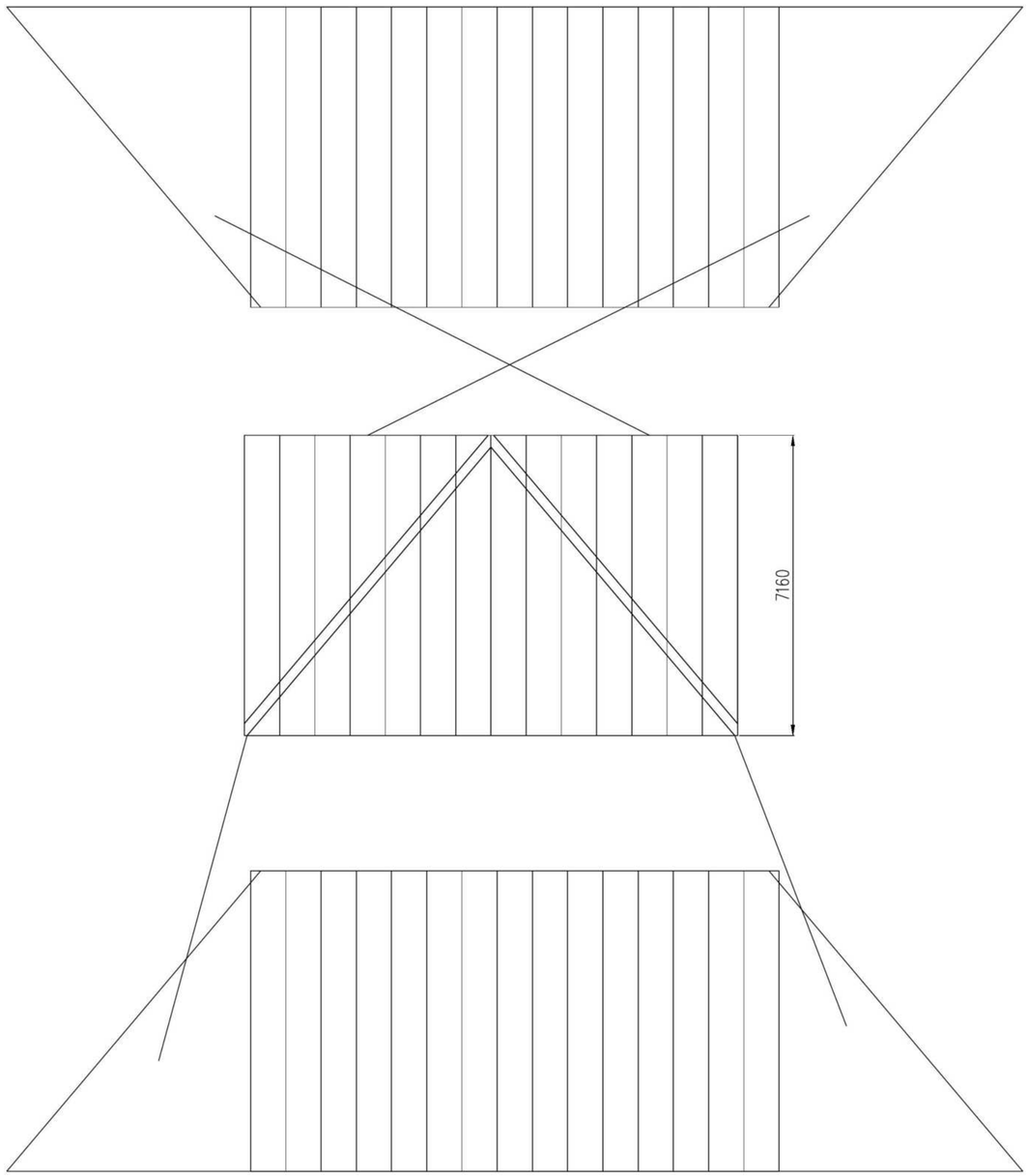

正坡面

Front Side of the Roof

正面与背面斜角需要用14张7.16米瓦，切割方式如图

14 pieces of 7.16M tiles are used for front and back sides of the roof.Cutting method refers to the above legend

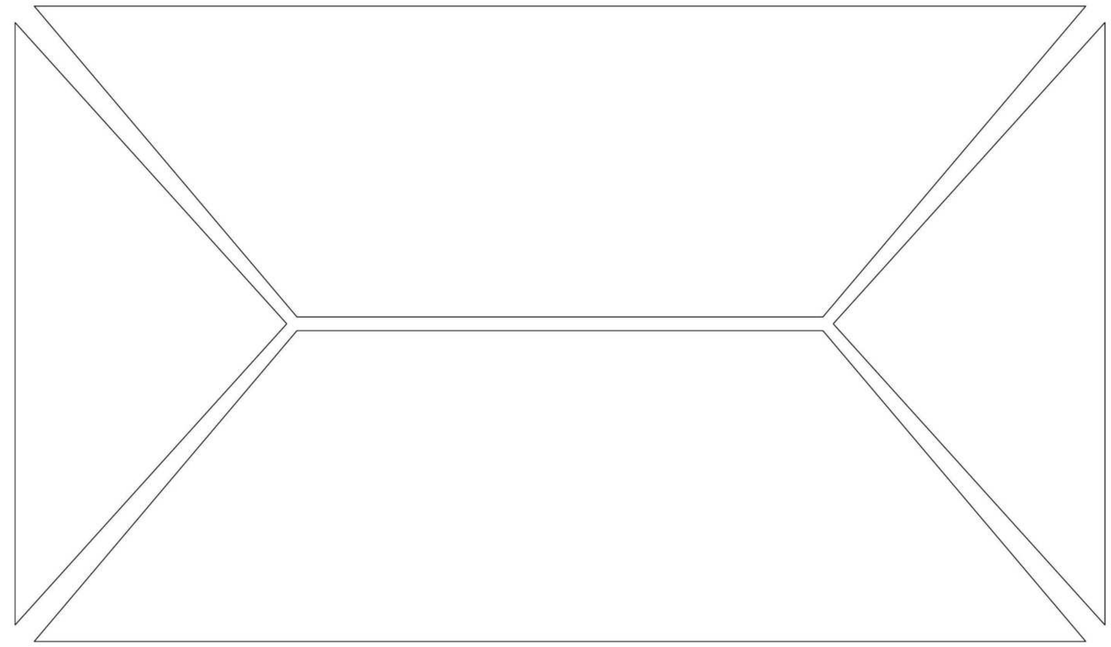

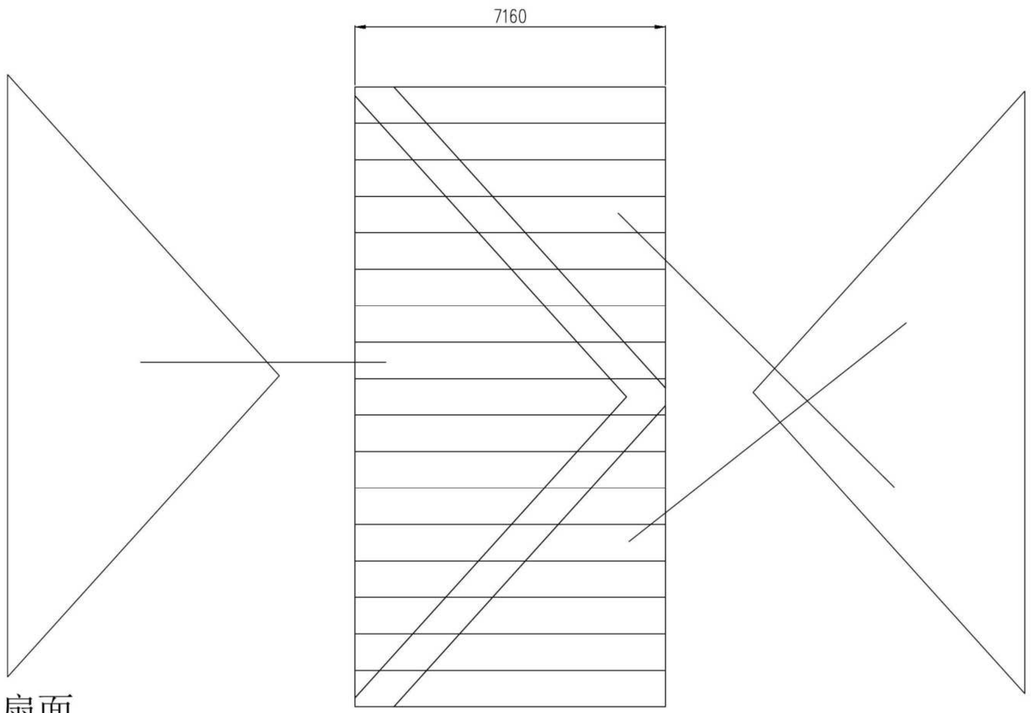

左扇面

Left Side of the Roof

右扇面

Right Side of the Roof

两侧扇面需要用17张7.16米瓦，切割方式如图

17 pieces of 7.16M tiles are used for left and right sides of the roof. Cutting method refers to the above legend.

顶瓦切割说明

Instructions of Cutting Tiles

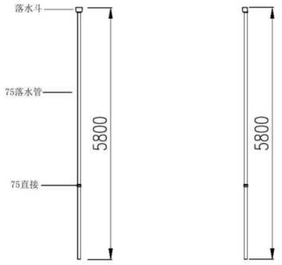

落水管示意

Downpipe Details

编号 No.	尺寸 SIZE	数量 QUANTITY
ST7		12

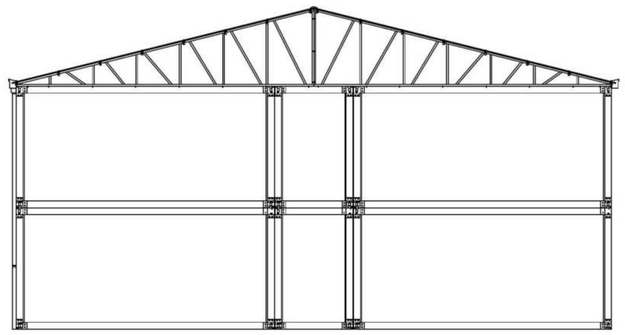

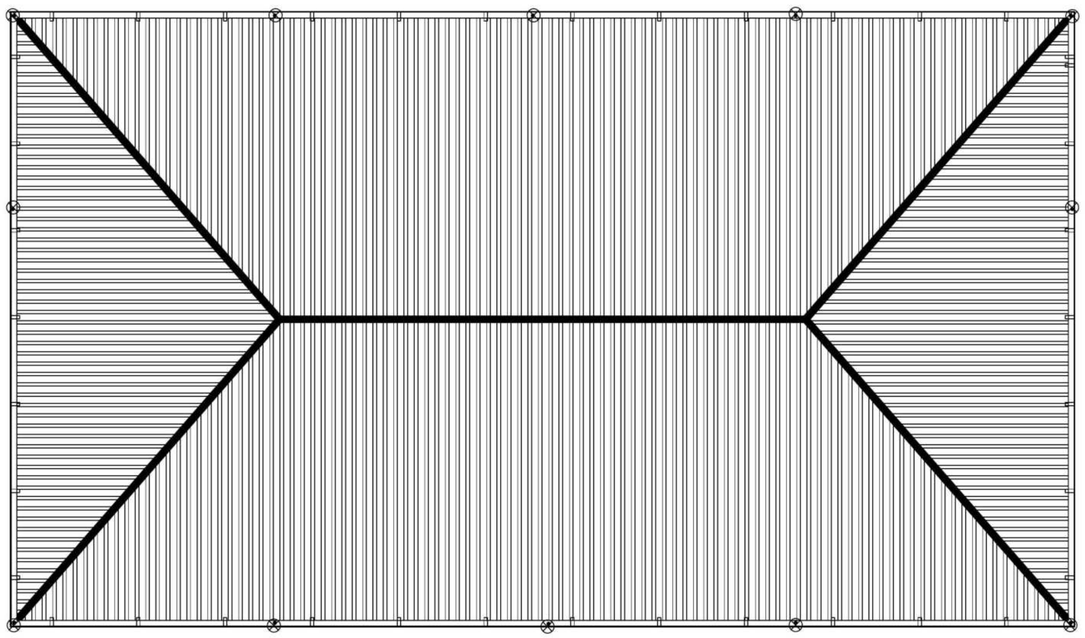

落水管排布图

Layout of Downpipe

说明

1、把连接好的落水管用管卡固定到箱体立柱上，并在天沟上开洞。

2，落水管的位置如图所示，间距为两间箱房，侧边两道落水管无需居中，放在走到箱与一侧箱体交接处

Remark

1.Use pipe clamp to fix the connected downpipe to the columns of the container house, and dig holes on the gutters.

2.Refer to the left legend for the places of downpipes (red points). The distance between two downpipes of the front and back side sho is with the same width of two container houses. The downpipes of left and right sides are placed in the connection parts of walkway box and side box, no need to place in the middle of each side.

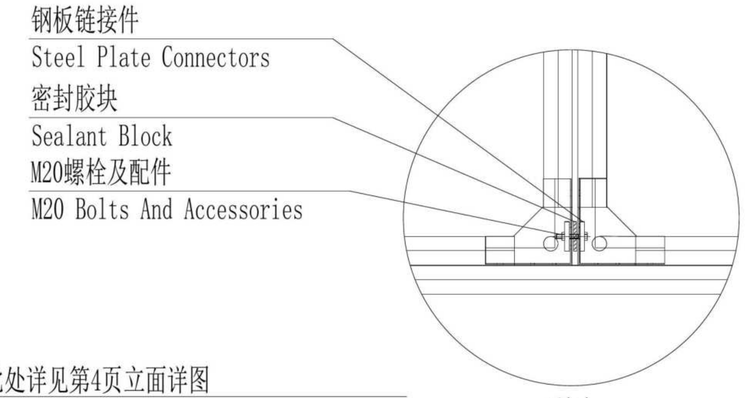

A放大
Detail A

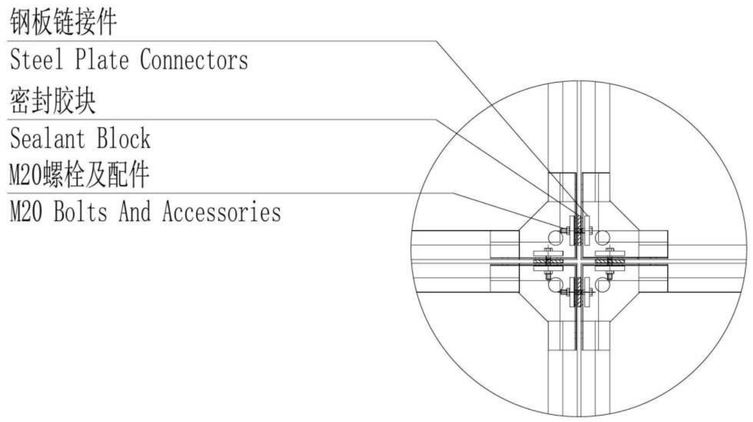

B放大
Detail B

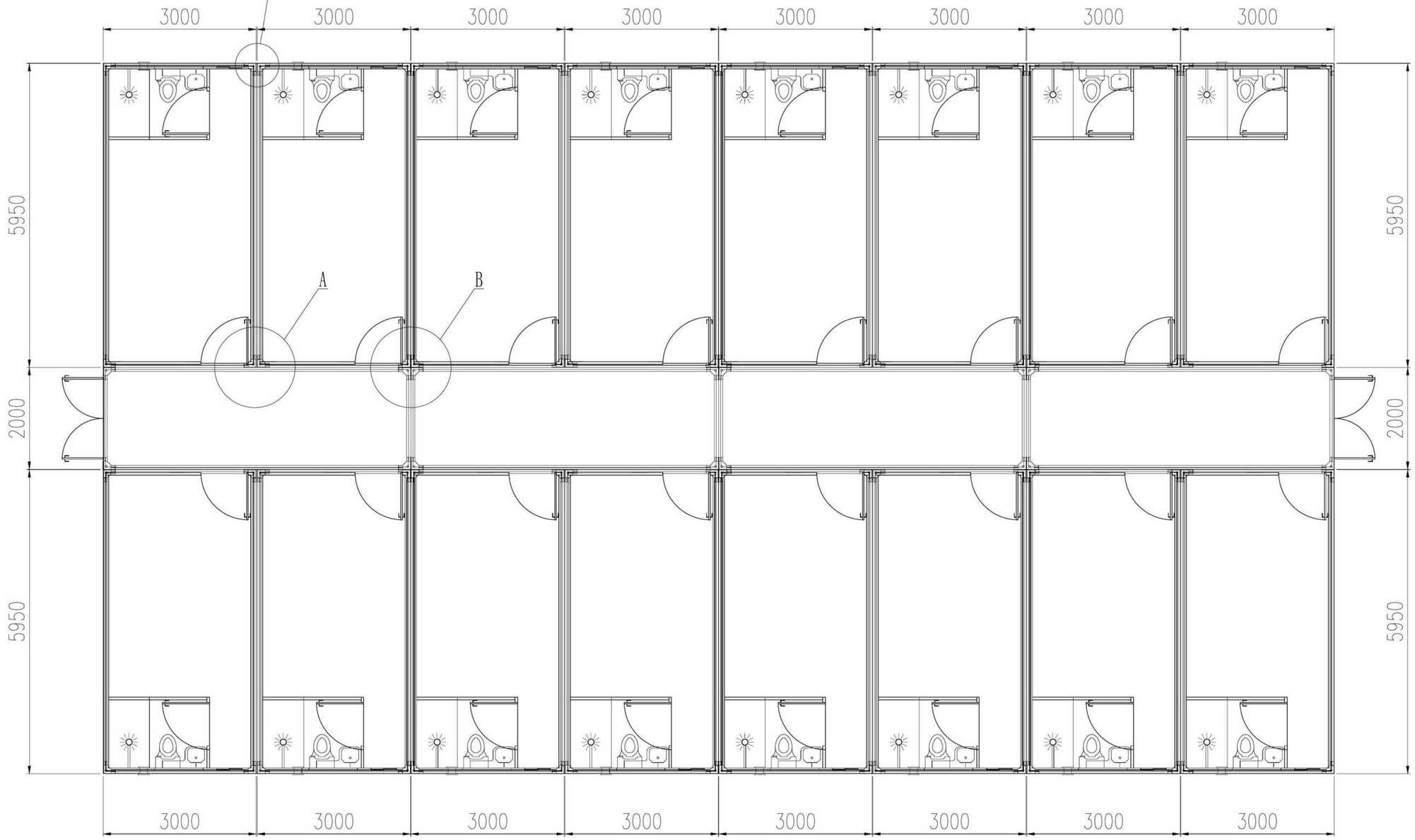

一层布置图
First Floor Layout

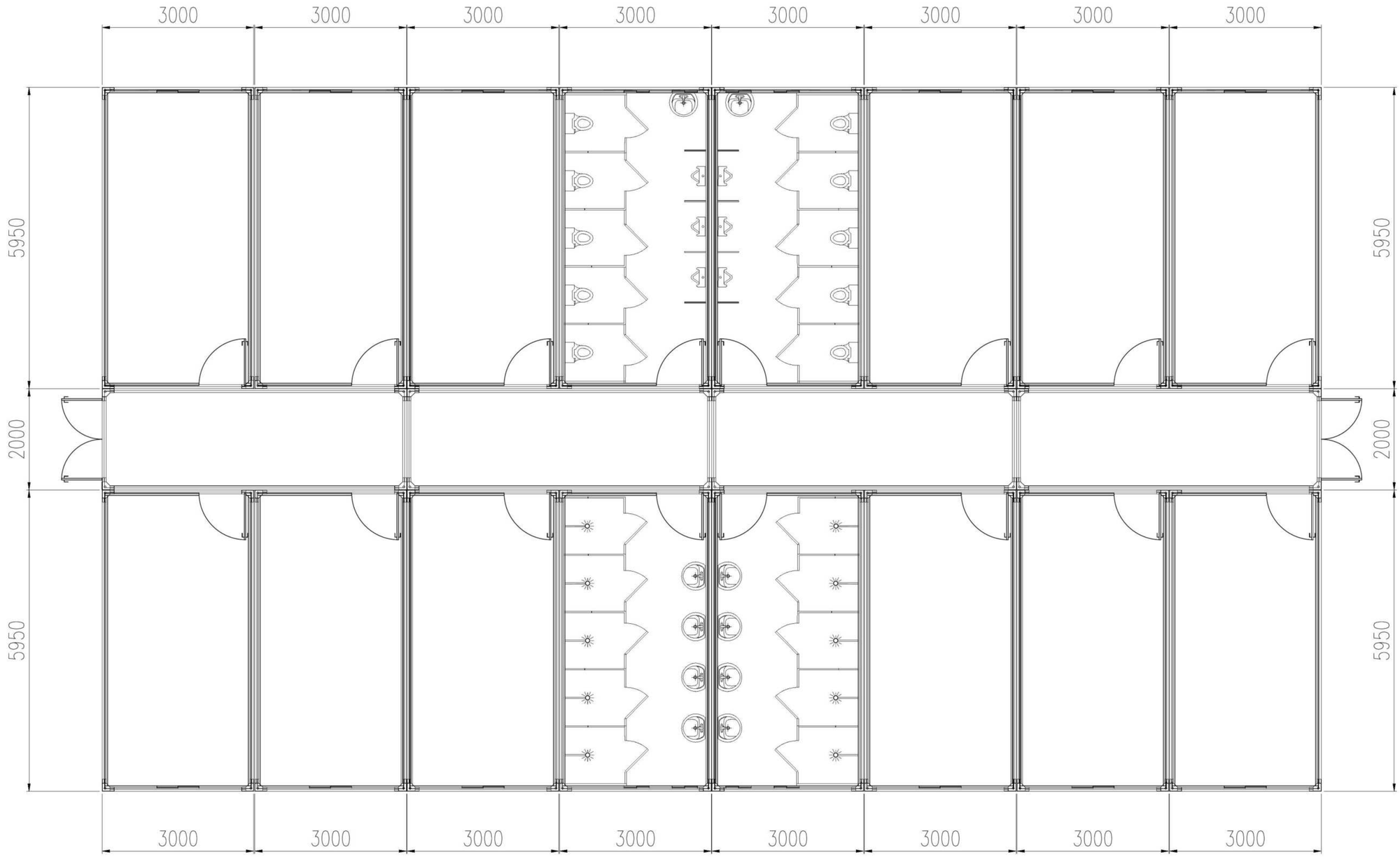

二层布置图
Second Floor Layout

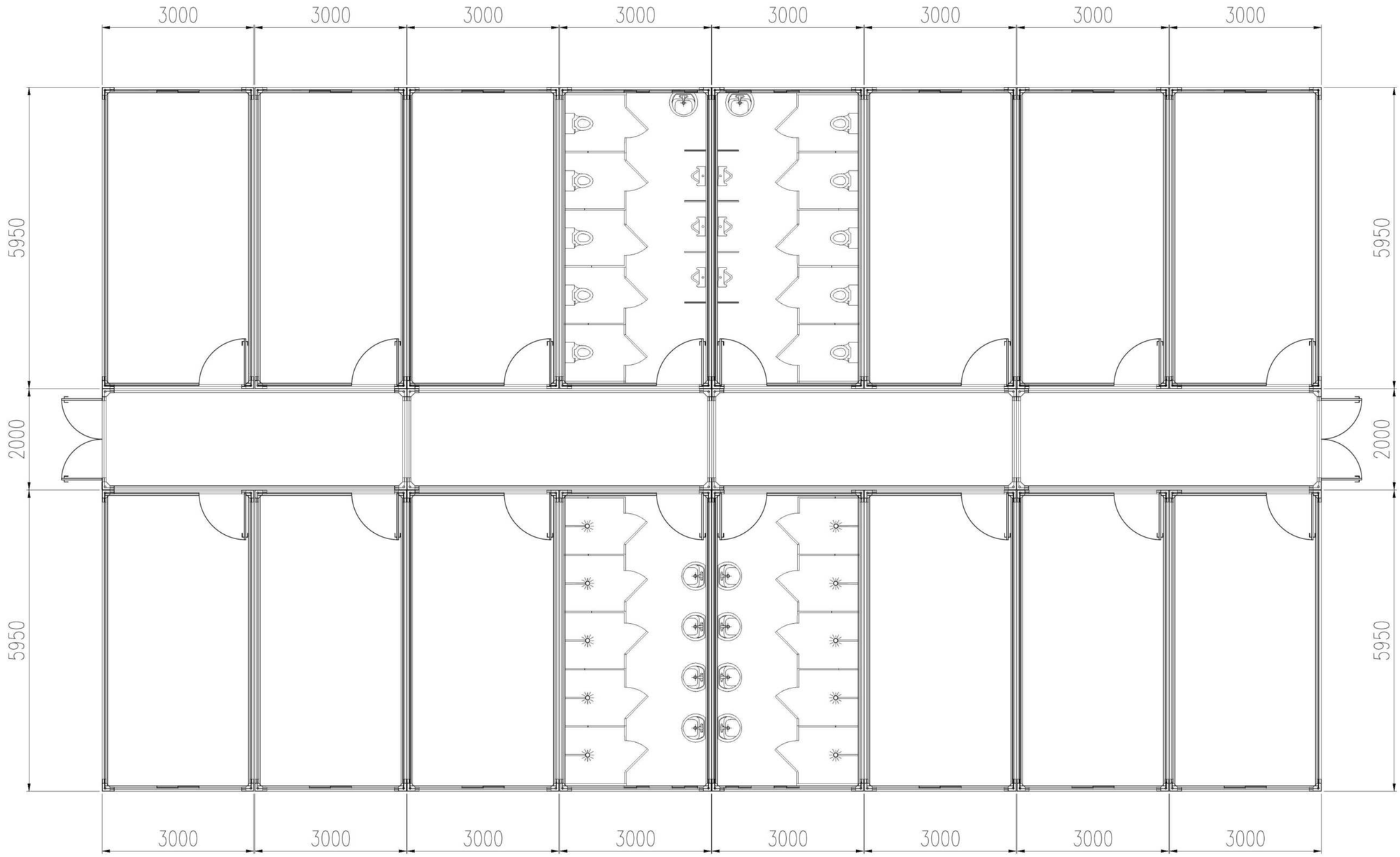

三层布置图
Third Floor Layout

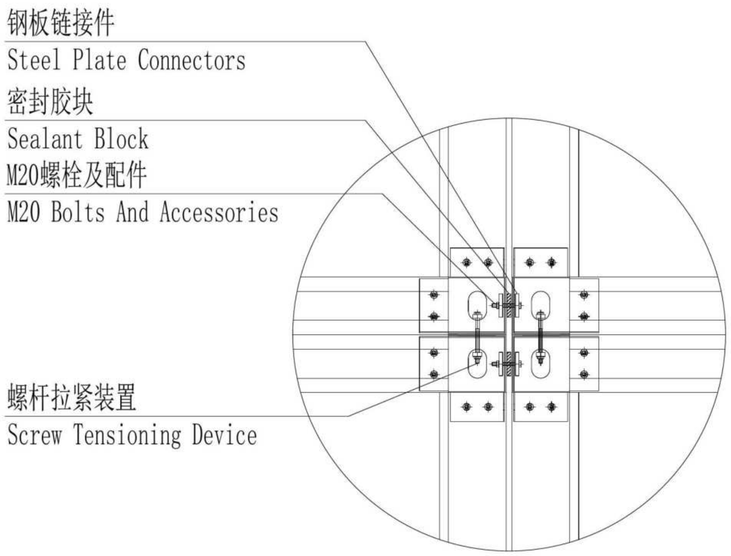

C放大
Detail C

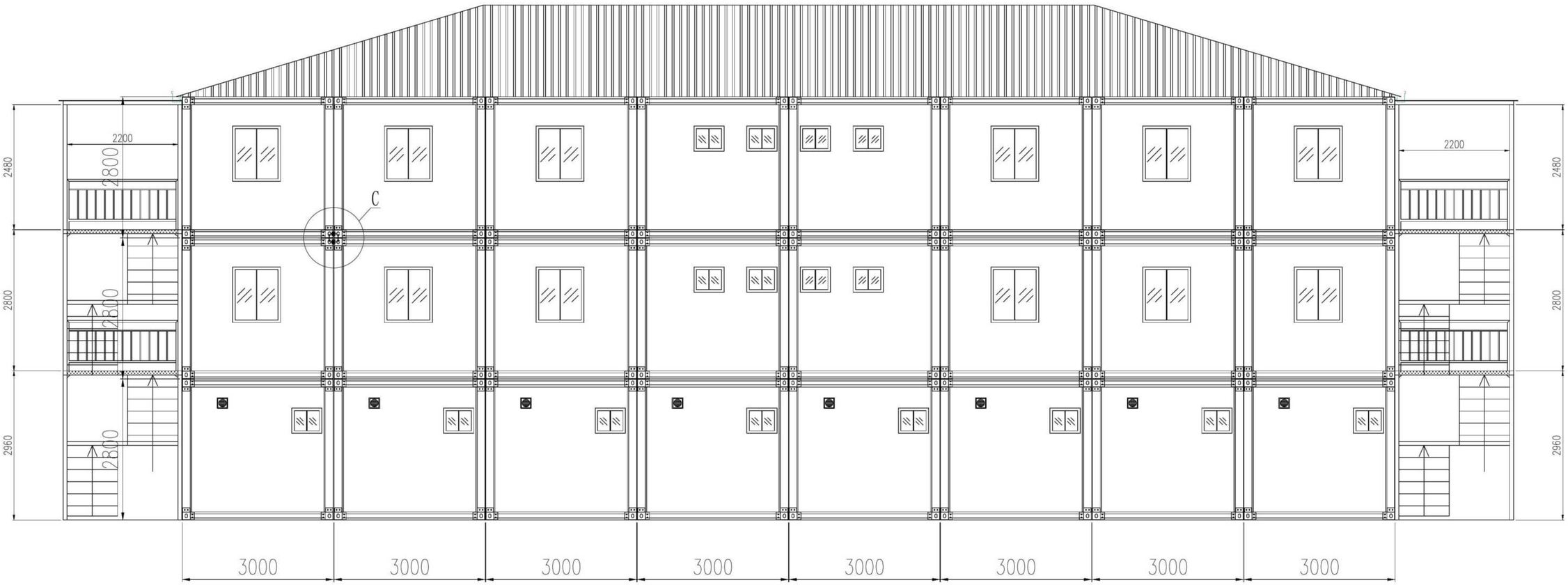

正向立面图
Front Elevation View

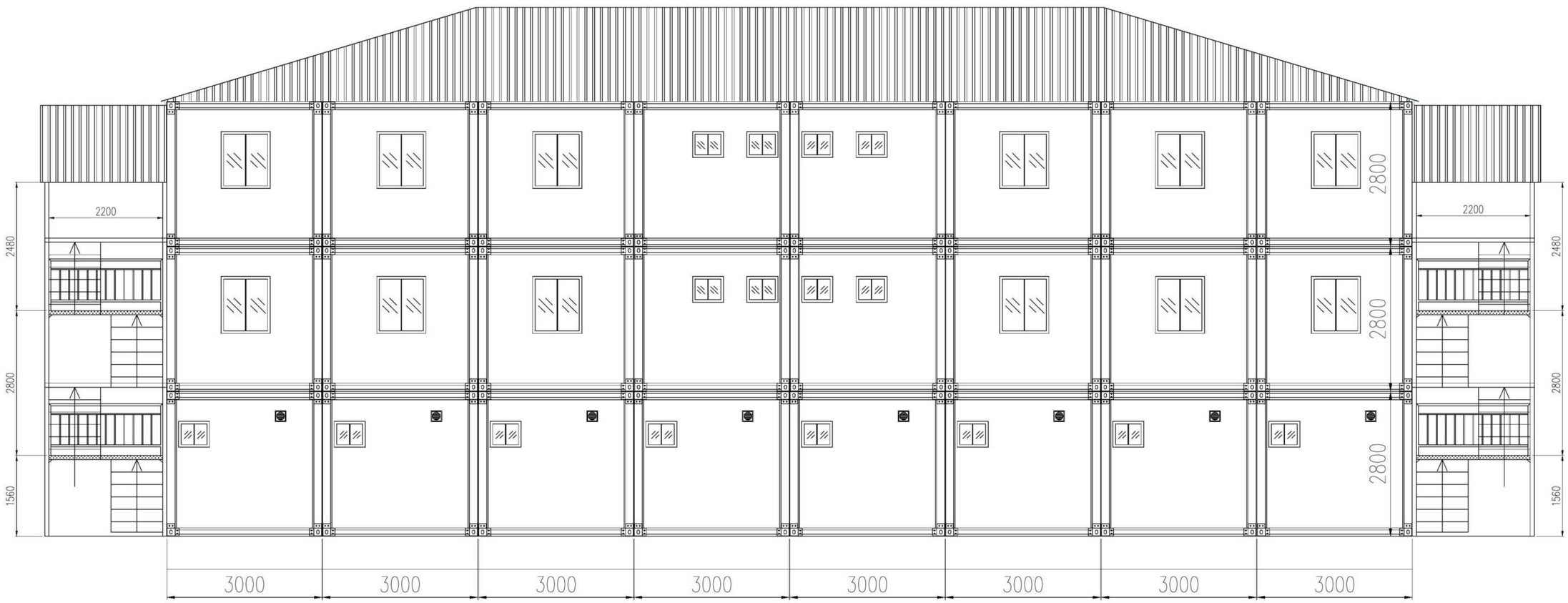

后立面图
Back Elevation View

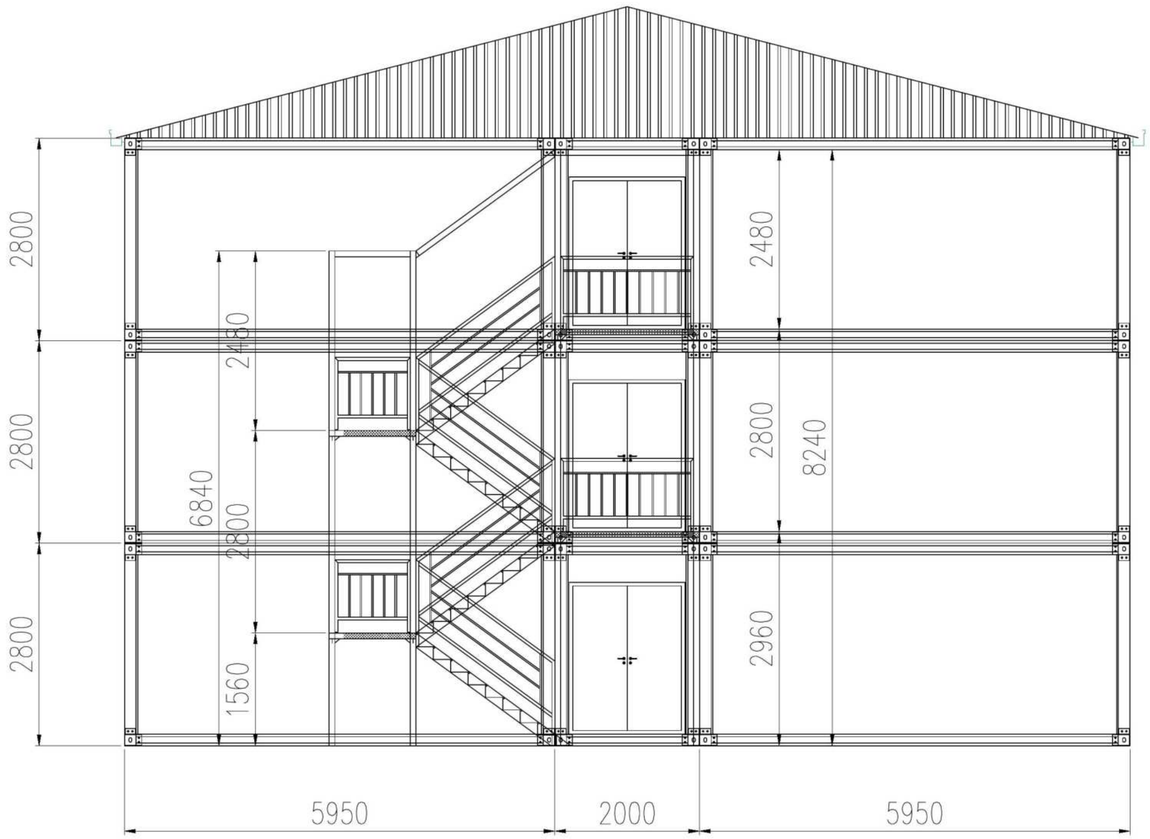

左侧立面图
Left Elevation View

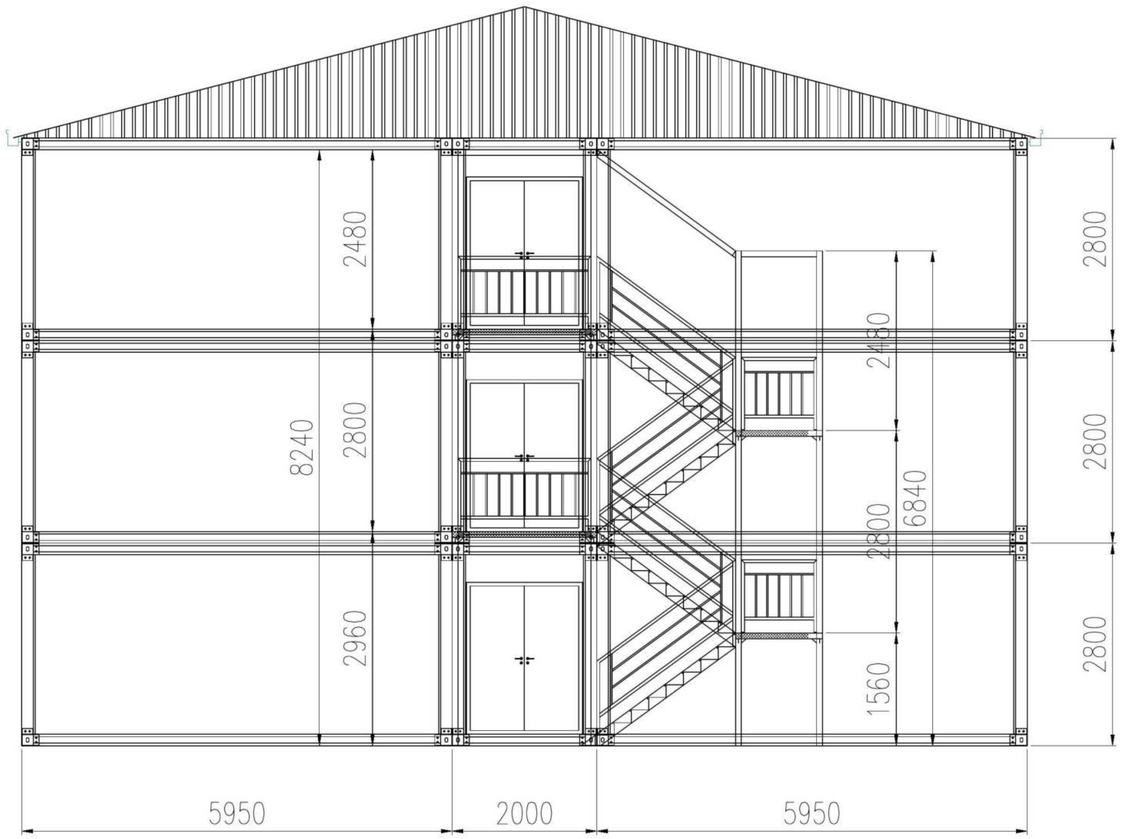

右侧立面图
Right Elevation View

①

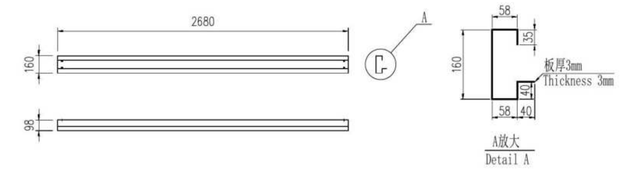

顶部短梁
Roof Short Beam - 2.68m

②

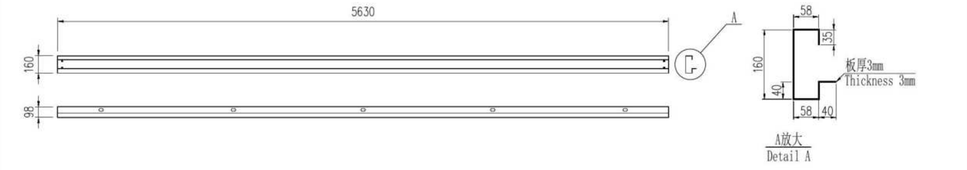

顶部长梁
Roof Long Beam - 5.63m

③

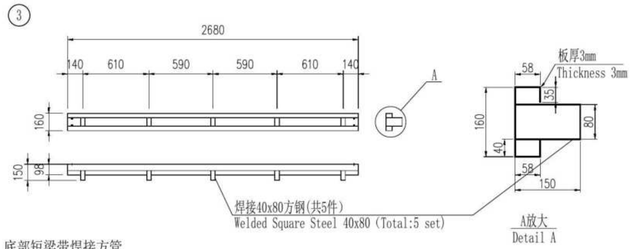

底部短梁带焊接方管
Floor Beam with Welded Square Tubes- 2.68m

④

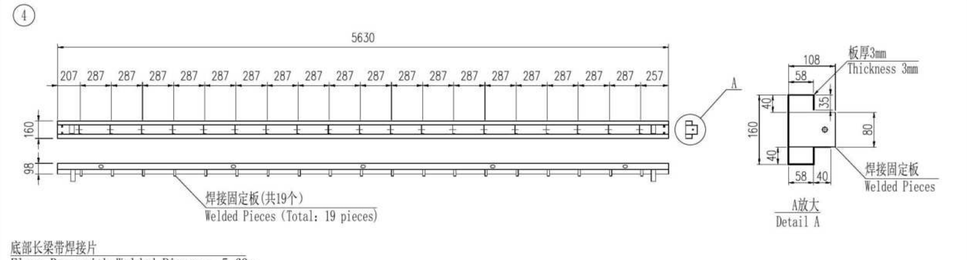

底部长梁带焊接片
Floor Beam with Welded Pieces - 5.63m

⑤

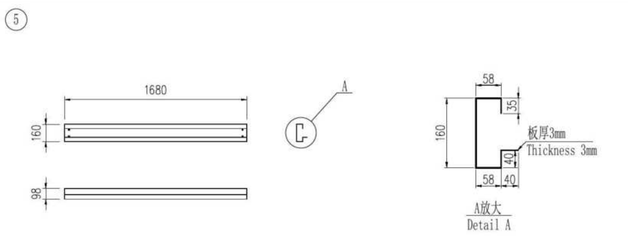

走道箱顶部短梁
Walkway Roof Short Beam - 1.68m

⑥

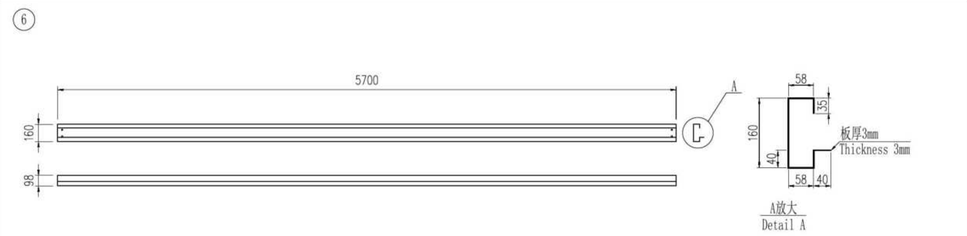

走道箱顶部长梁
Walkway Roof Long Beam - 5.7m

⑦

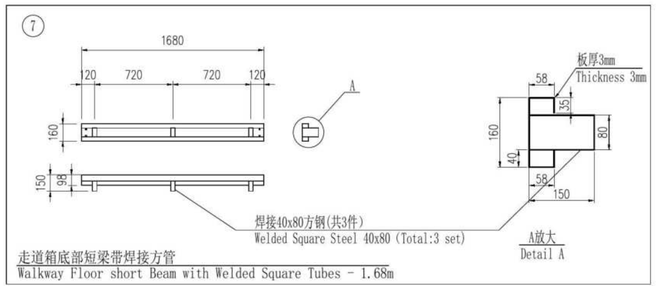

走道箱底部短梁带焊接方管
Walkway Floor short Beam with Welded Square Tubes - 1.68m

⑧

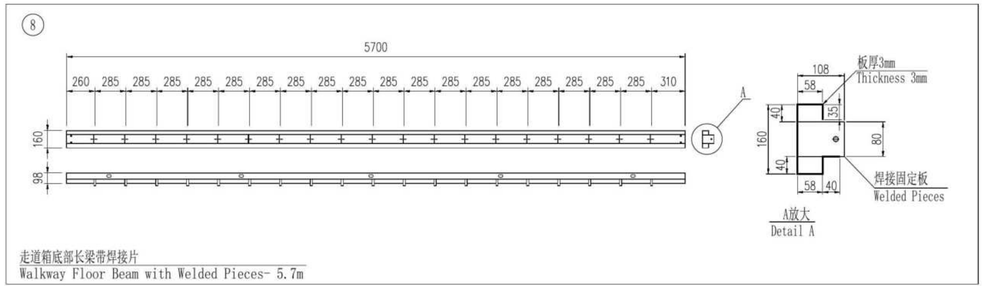

走道箱底部长梁带焊接片
Walkway Floor Beam with Welded Pieces- 5.7m

⑨

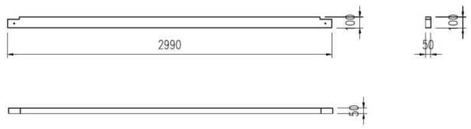

底部次梁
Bottom secondary beam

⑪

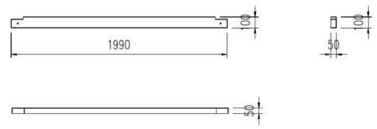

走道箱底部次梁
Walkway Bottom secondary beam

⑩

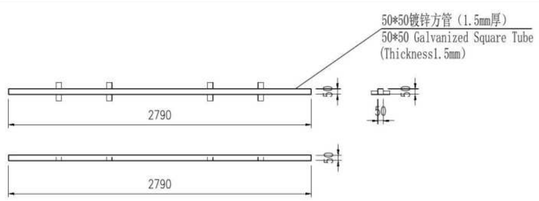

顶部次梁
Roof secondary beam

⑩.①

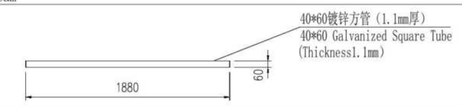

⑩.②

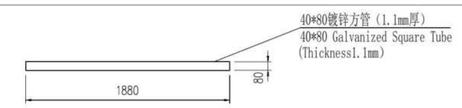

⑩.③

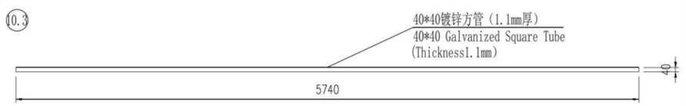

⑫

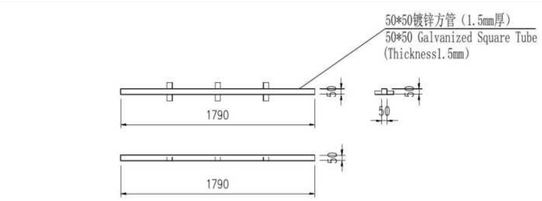

走道箱顶部次梁
Walkway Roof secondary beam

⑫.①

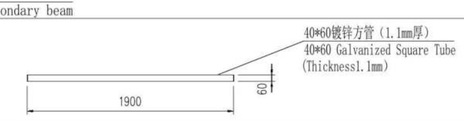

⑫.②

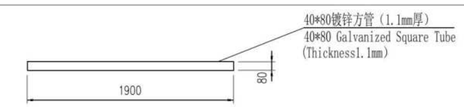

⑬

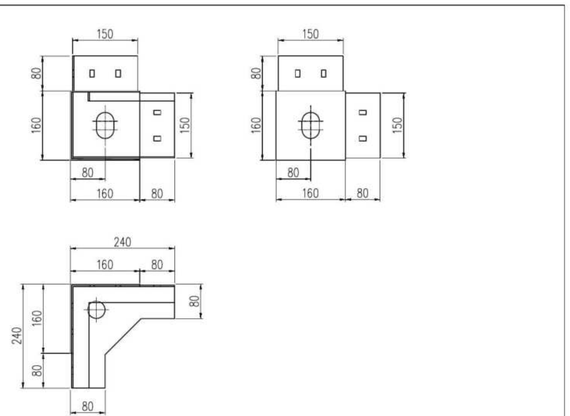

型钢角件
Corner Piece

⑭

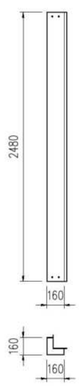

型钢立柱
Column - 2.48m

⑮

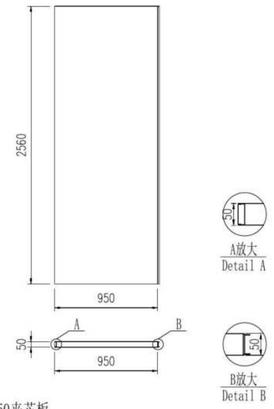

50夹芯板
50 sandwich panel

⑮.1

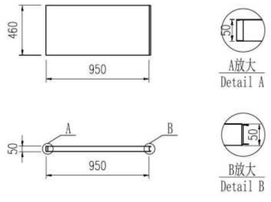

⑮.2

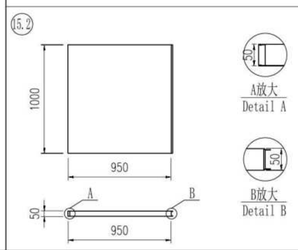

⑯

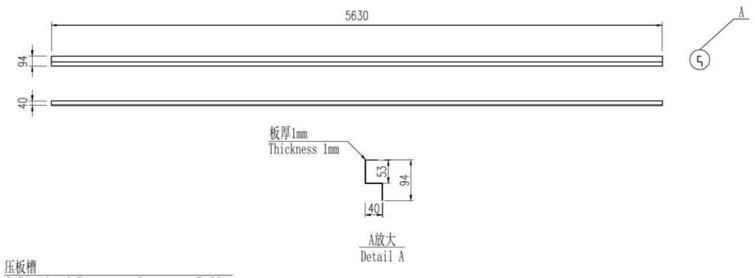

压板槽
Galvanized Pressure Groove - 5.63m

⑰

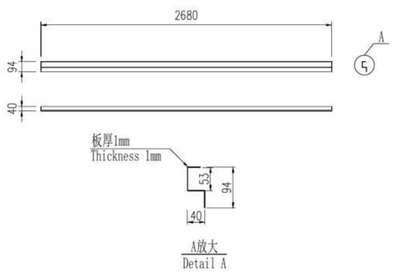

压板槽
Galvanized Pressure Groove - 2.68m

⑱

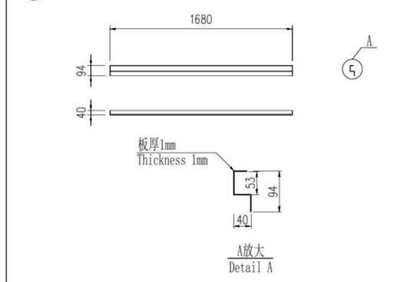

压板槽
Galvanized Pressure Groove - 1.68m

⑲

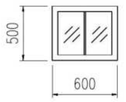

塑钢中空窗（600*500）
PVC Double Hollow Sliding Window

⑳

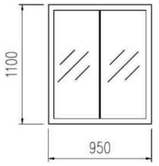

塑钢中空窗（950*1100）
PVC Double Hollow Sliding Window

㉑

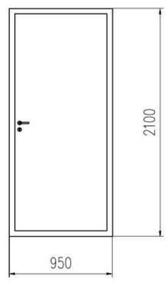

打包箱门
Flat Pack Container House Door

㉒

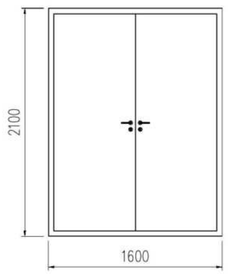

Right View

打包箱双开门
Flat Pack Container House Door

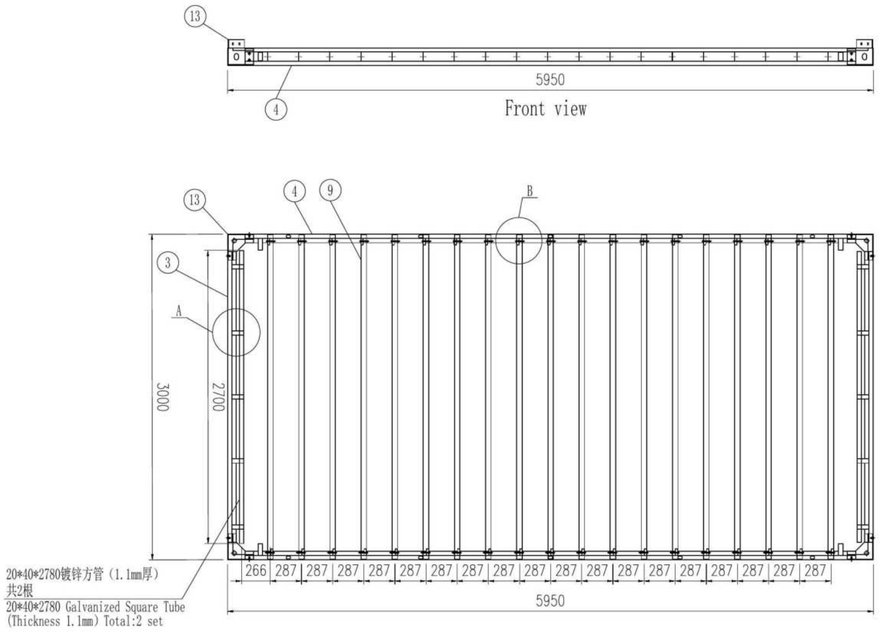

底面布置

Layout Of Bottom Components

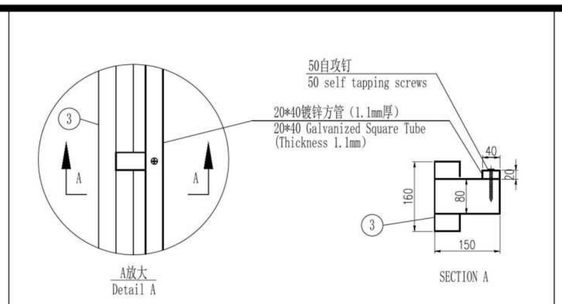

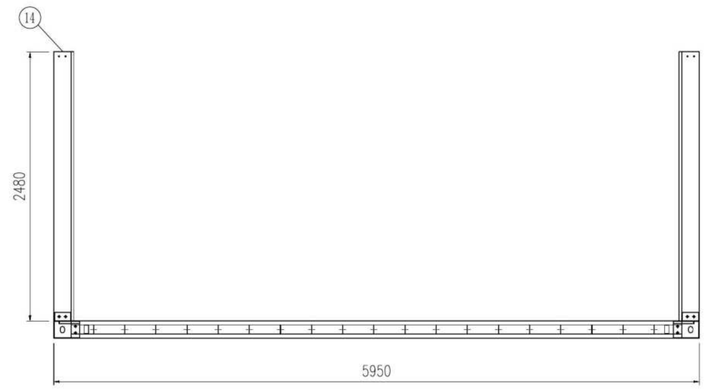

立柱安装

Column Installation

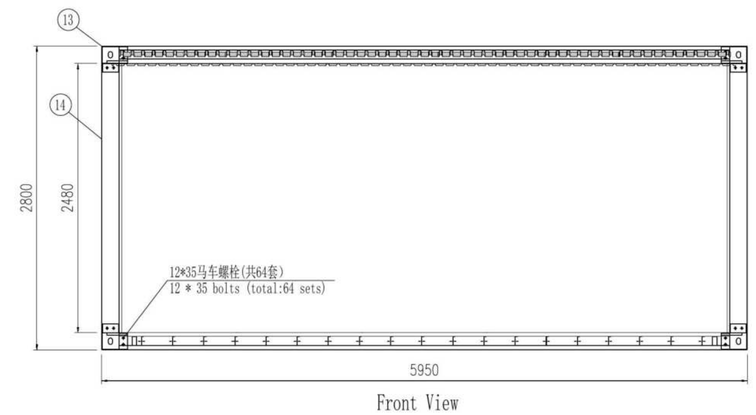

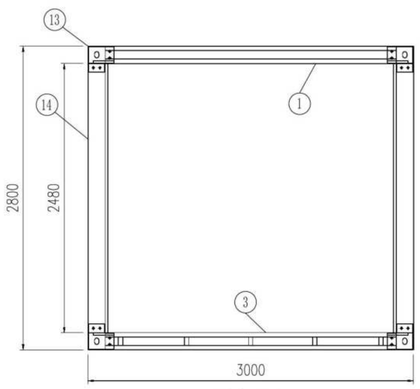

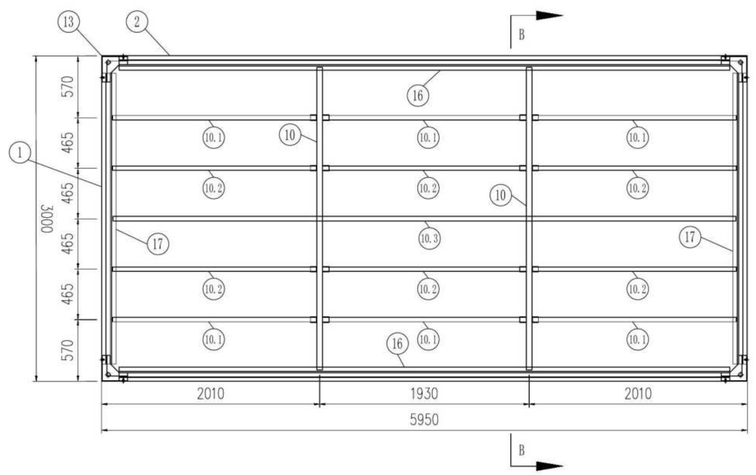

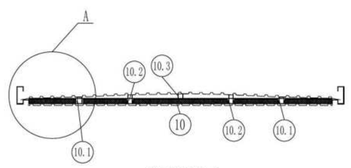

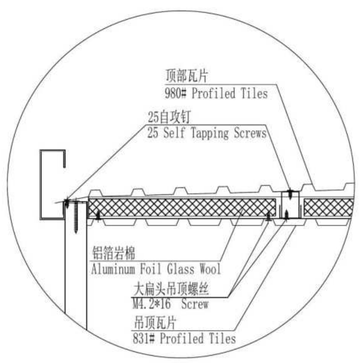

顶部布置

Layout Of Roof Components

材料单
Bill of Material

原件号 Component No.	名称 Item	描述 Descriptiones	数量 Quantity	单位 Unit
1	顶部短梁 Roof Short Beam	2680mm	2	set
2	顶部长梁 Roof Long Beam	5630mm	2	set
3	底部短梁带焊接方管 Floor Beam with Welded Square Tubes	2680mm	2	set
4	底部长梁带焊接片 Floor Beam with Welded Pieces	5630mm	2	set
9	底部次梁 Bottom secondary beam	2990mm	19	set
13	型钢角件 Corner Piece		8	set
14	立柱 Column	2480mm	4	set
10	顶部次梁 Roof Secondary Beam	2790mm	2	set
10.1	顶部次梁 Roof Secondary Beam	40x60x1880mm	6	set
10.2	顶部次梁 Roof Secondary Beam	40x80x1880mm	6	set
10.3	顶部次梁 Roof Secondary Beam	40x40x5740mm	1	set
16	压板槽 Galvanized Pressure Groove	5630mm	2	set
17	压板槽 Galvanized Pressure Groove	2680mm	2	set
	镀锌方管 Galvanized Square Tube	20*40*2780mm	2	set

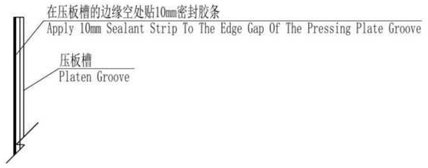

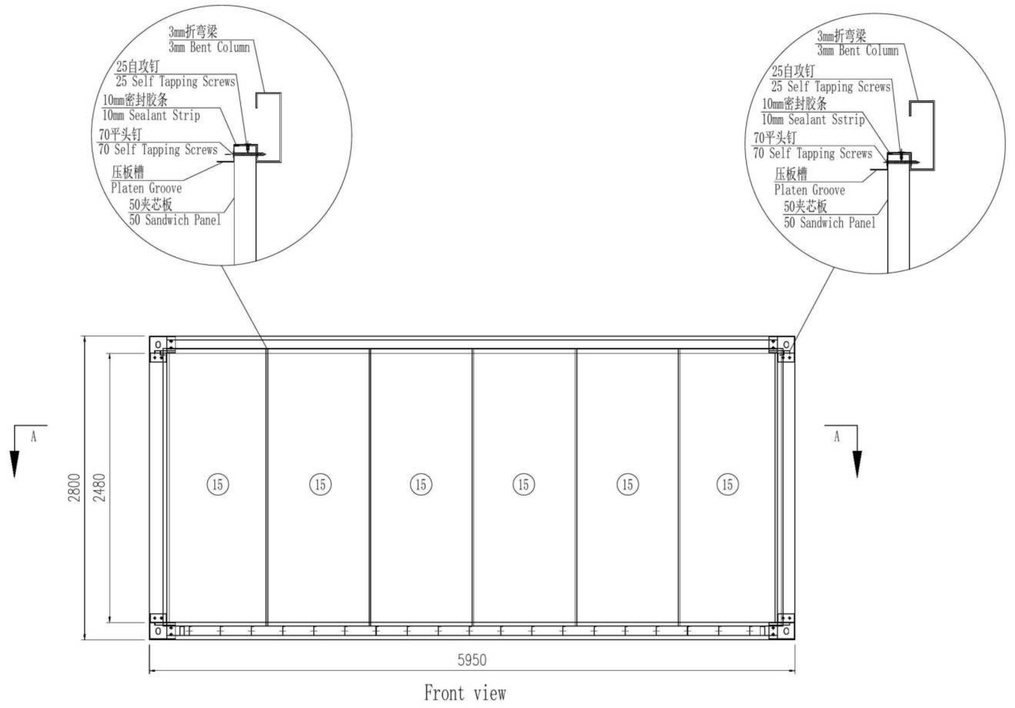

Front view

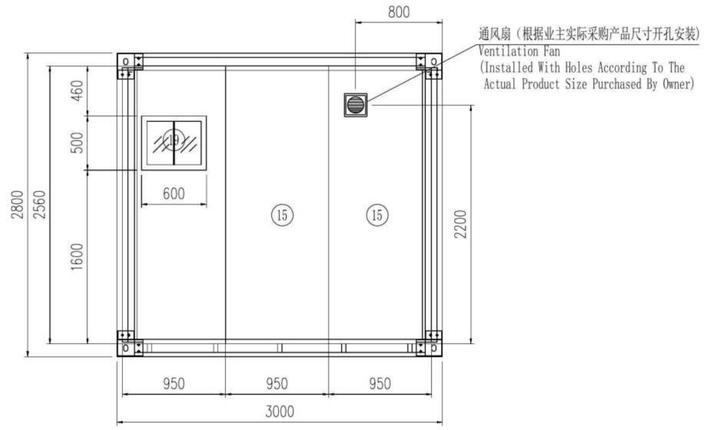

SECTION C

浴室外墙安装图
Bathroom External Wall Installation Drawing

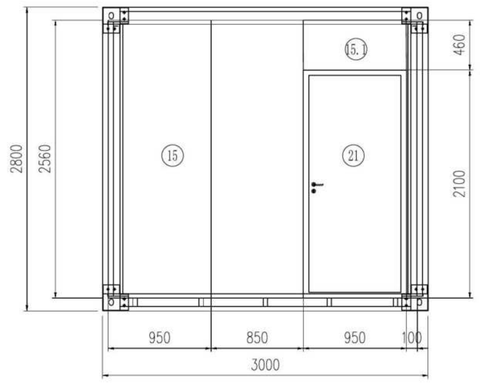

SECTION B

Bathroom Internal Wall And Door Installation Drawing

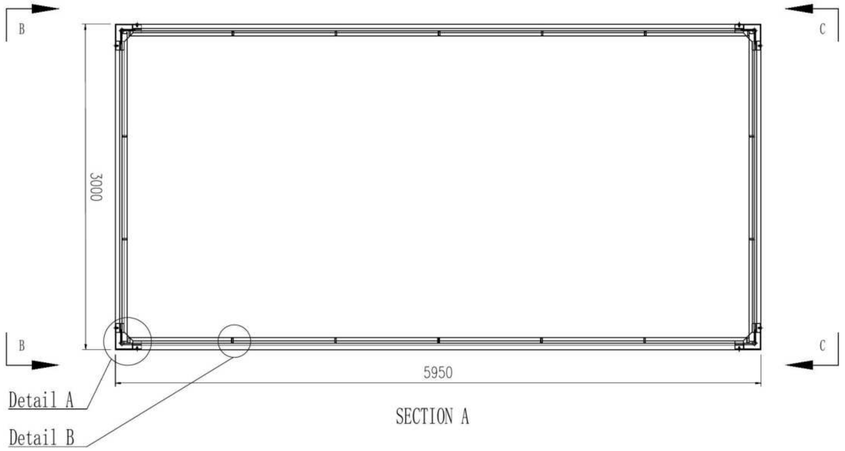

SECTION A

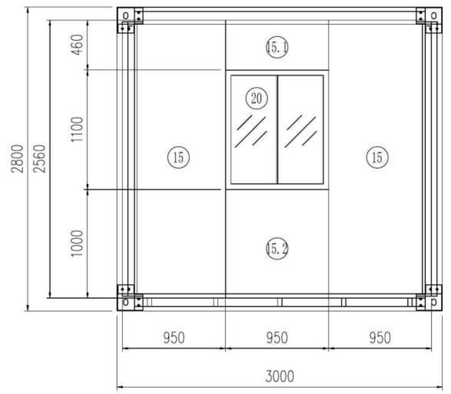

SECTION C

标准间外墙安装图
Standard Room External Wall Installation Drawing

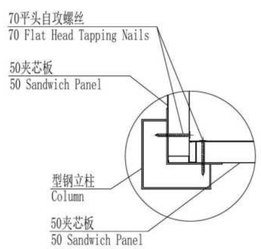

Detail A

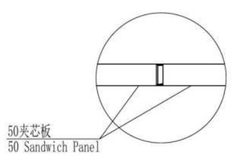

Detail B

材料单
Bill of Material

原件号 Component No.	名称 Item	描述 Descriptiones	数量 Quantity	单位 Unit
	标准箱房 Standard Container Room			
15	50夹芯板 50 Sandwich Panel	950*2560*50mm	16	set
15.1	50夹芯板 50 Sandwich Panel	950*460*50mm	2	set
15.2	50夹芯板 50 Sandwich Panel	950*1000*50mm	1	set
19	塑钢中空窗 PVC Double Hollow Sliding Window	600*500mm	Bathroom Only	set
20	塑钢中空窗 PVC Double Hollow Sliding Window	925*1200mm	1	set
21	打包箱门 Flat Pack Container House Door	925*2035mm	1	set

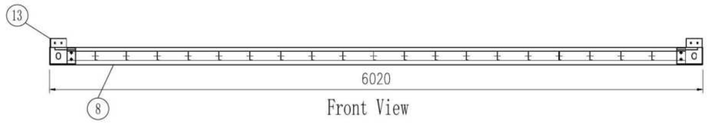

Front View

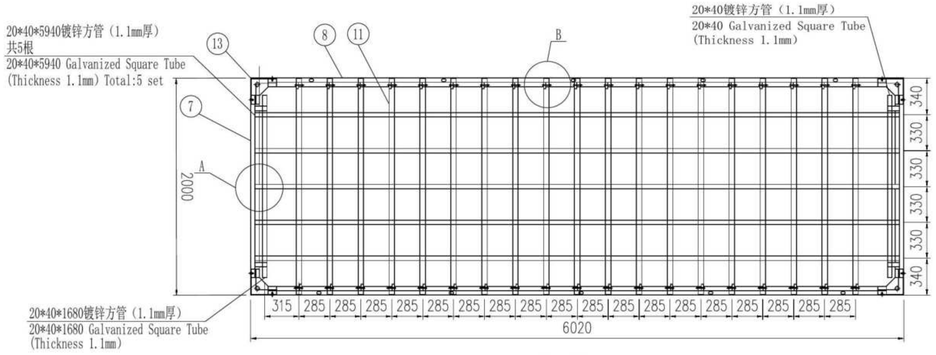

Top View

走道箱底面布置

Layout Of Walkway Bottom Components

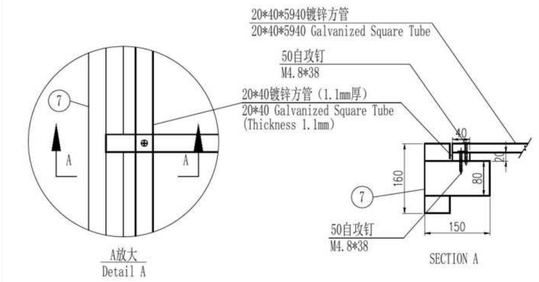

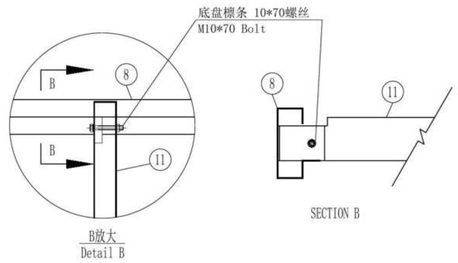

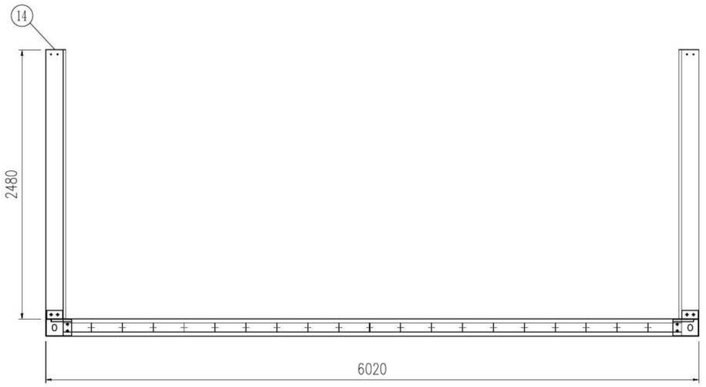

Front View

立柱安装

Column Installation

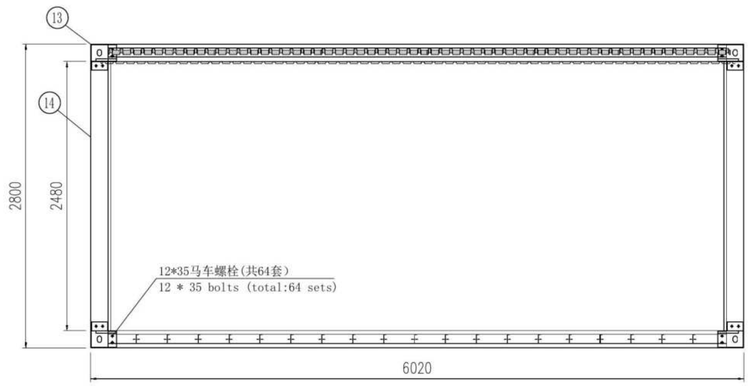

Front View

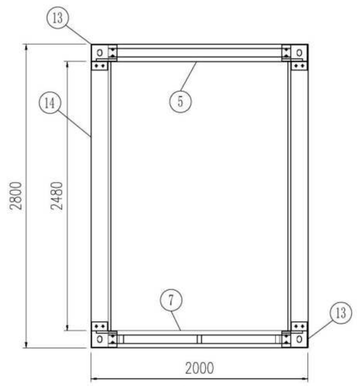

Right View

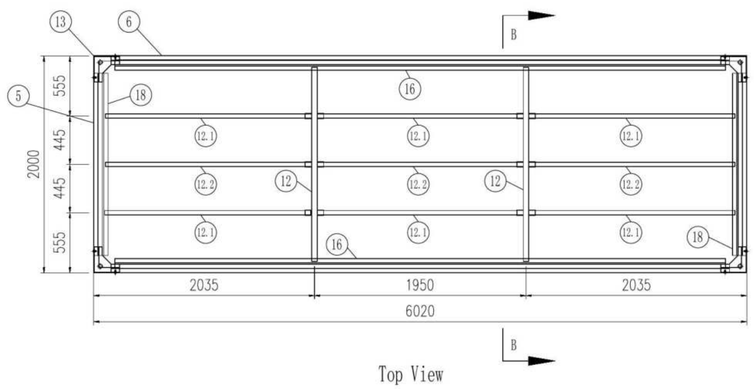

Top View

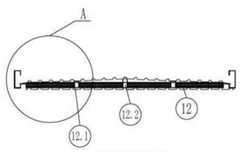

SECTION B

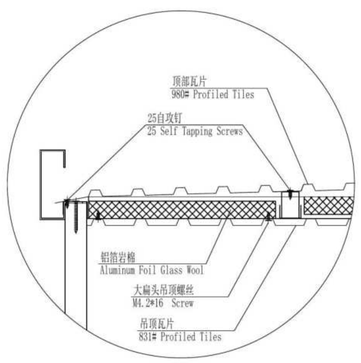

A放大
Detail A

走道箱顶部布置

Layout Of Walkway Roof Components

材料单
Bill of Material

原件号 Component No.	名称 Item	描述 Descriptiones	数量 Quantity	单位 Unit
5	走道箱顶部短梁 Walkway Roof Short Beam	1680mm	2	set
6	走道箱顶部长梁 Walkway Roof Long Beam	5700mm	2	set
7	走道箱底部短梁带焊接方管 Walkway Floor short Beam with Welded Square Tubes	1680mm	2	set
8	走道箱底部长梁带焊接片 Walkway Floor Beam with Welded Pieces	5700mm	2	set
11	走道箱底部次梁 Walkway Bottom secondary beam	1990mm	19	set
13	型钢角件 Corner Piece		8	set
14	立柱 Column	2480mm	4	set
12	走道箱顶部次梁 Walkway Roof secondary beam	1790mm	2	set
12.1	顶走道箱部次梁 Walkway Roof secondary beam	40x60x1900mm	6	set
12.2	走道箱顶部次梁 Walkway Roof secondary beam	40x80x1900mm	6	set
16	压板槽 Galvanized Pressure Groove	5630mm	2	set
18	压板槽 Galvanized Pressure Groove	1680mm	2	set
	镀锌方管 Galvanized Square Tube	20*40*1680mm	2	set
	镀锌方管 Galvanized Square Tube	20*40*5940mm	5	set

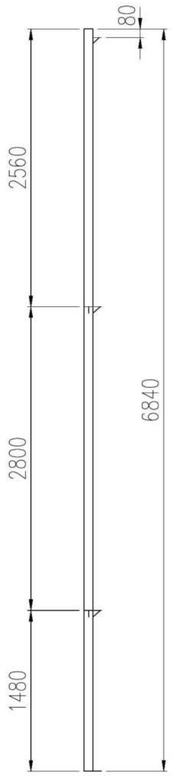

1-1 8*8方管加厚
Stair Posts

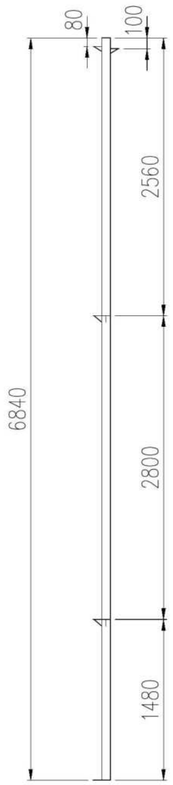

1-2 8*8方管加厚
Stair Posts

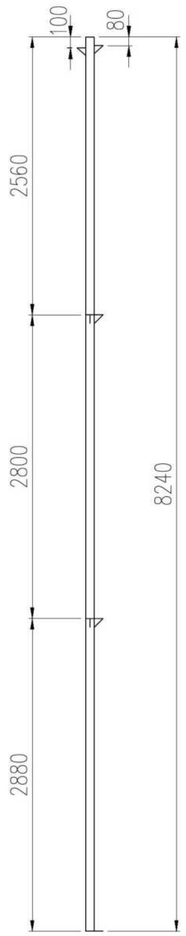

1-3 8*8方管加厚
Stair Posts

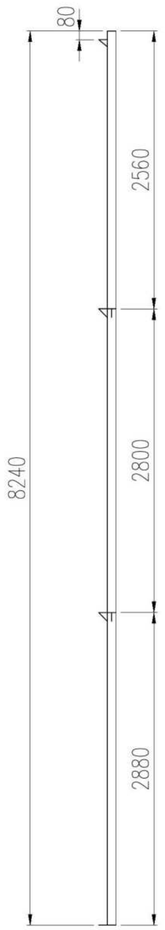

1-4 8*8方管加厚
Stair Posts

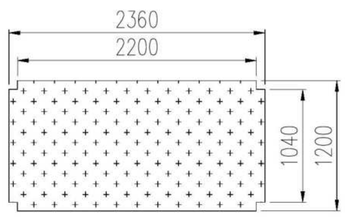

2-1平台板 下焊8*8方管
Stair Landing

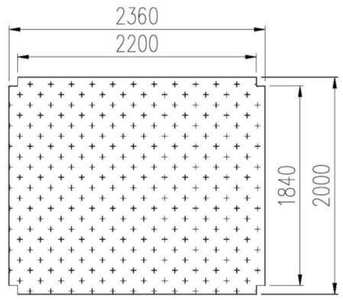

2-2平台板 块下焊8*8方管
Stair Landing

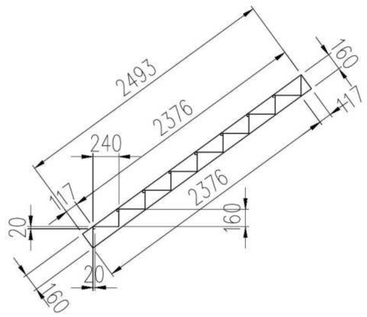

3-1
Stairs

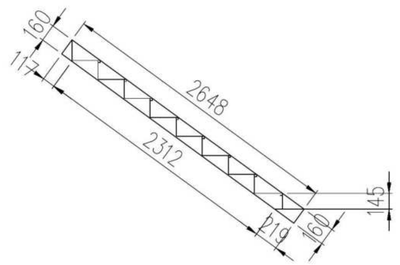

3-2
Stairs

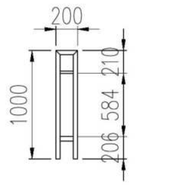

4-1
Edge Banister

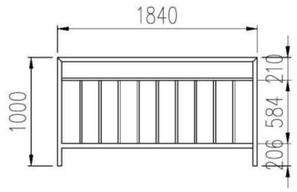

4-2
Edge Banister

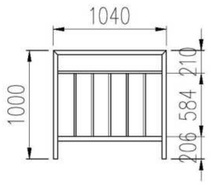

4-5
Edge Banister

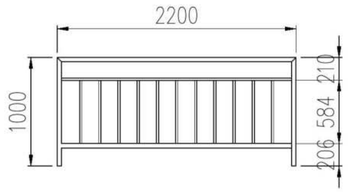

4-6
Edge Banister

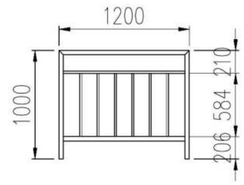

4-7
Edge Banister

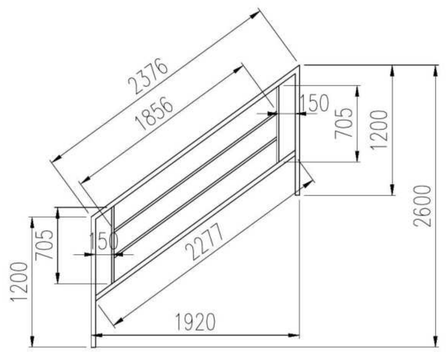

5-1
The Banister Of The Stairs

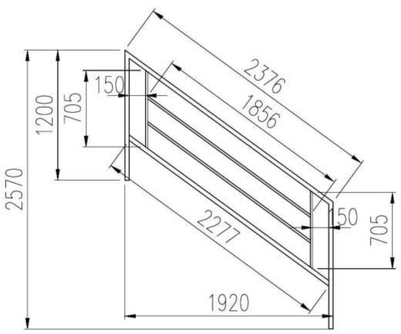

5-2
The Banister Of The Stairs

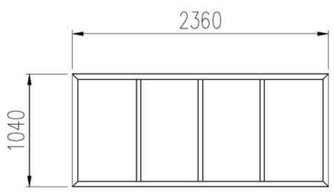

6-1 （4*8方管焊）
Awning Shelf

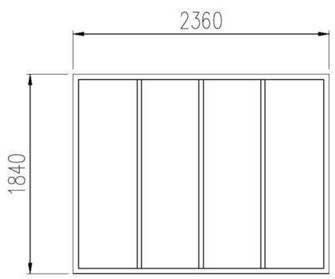

6-2 （4*8方管焊）
Awning Shelf

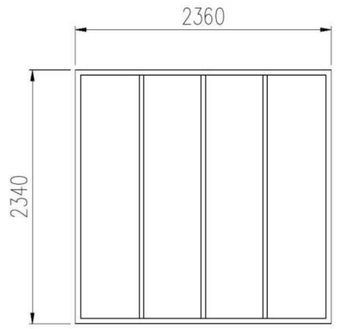

6-3 （4*8方管焊）
Awning Shelf

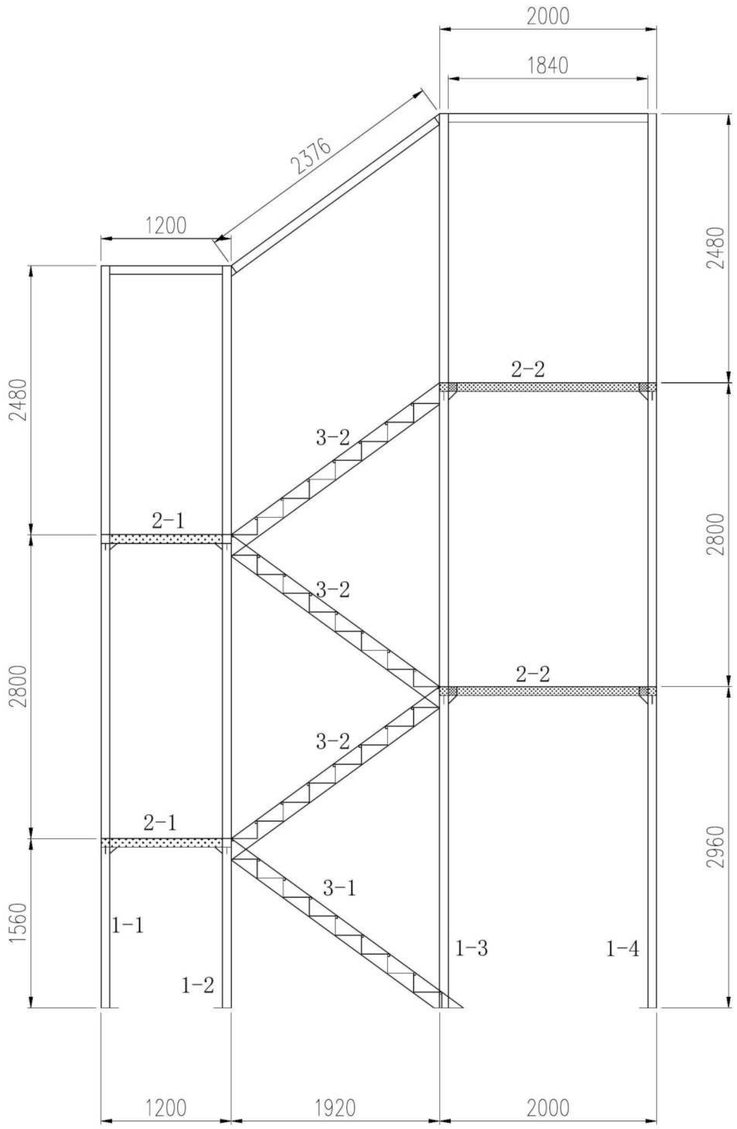

侧立面
Side View

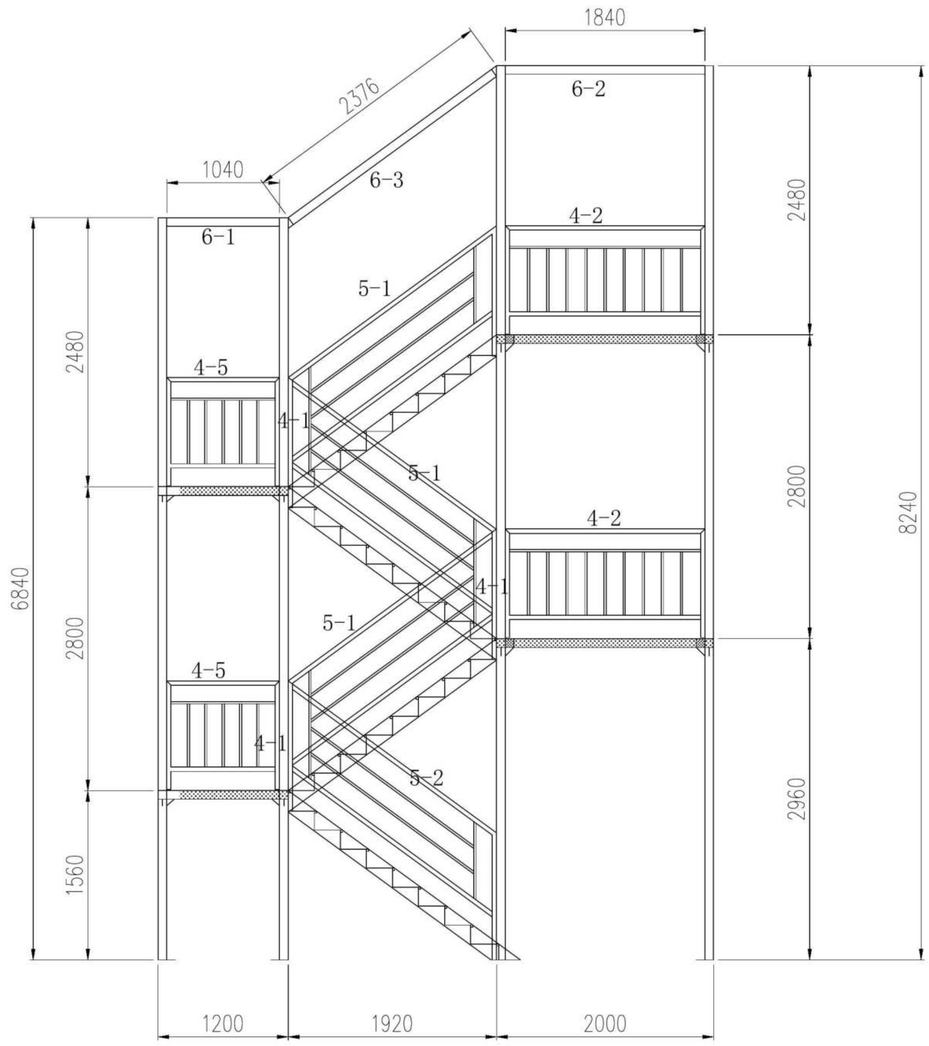

侧立面
Side View

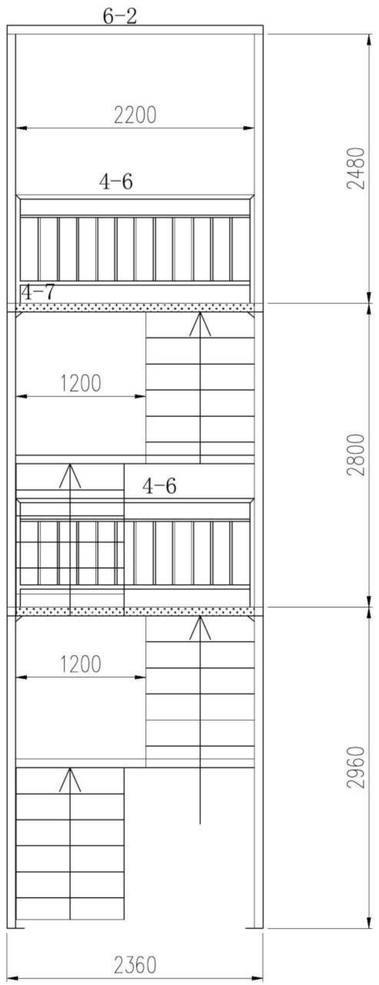

正立面
Front View

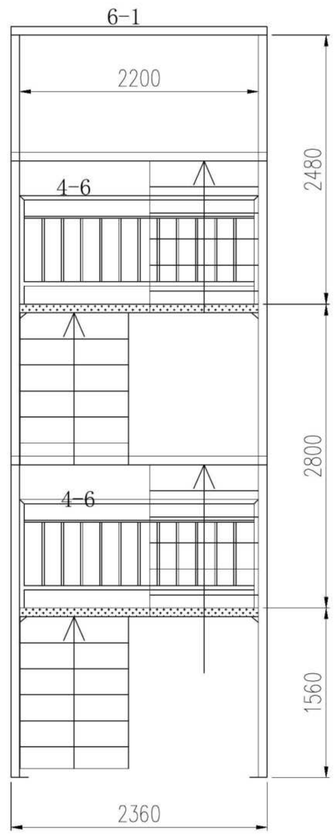

后立面
Back View

一套楼梯材料
One Set Of Staircase Materials

材料单
Bill of Material

原件号 Component No.	名称 Item	描述 Descriptiones	数量 Quantity	单位 Unit
1-1	楼梯立柱 Stair Posts	6840mm	2	set
1-2	楼梯立柱 Stair Posts	6840mm	2	set
1-3	楼梯立柱 Stair Posts	8240mm	2	set
1-4	楼梯立柱 Stair Posts	8240mm	2	set
2-1	楼梯平台板 Stair Landing	2360*1200mm	2	set
2-2	楼梯平台板 Stair Landing	2360*2000mm	2	set
3-1	台阶 Stair	2493*160mm	3	set
3-2	台阶 Stair	2468*160mm	1	set
4-1	护栏 Edge Banister	1000*200mm	3	set
4-2	护栏 Edge Banister	1000*1840mm	2	set
4-5	护栏 Edge Banister	1000*1040mm	4	set
4-6	护栏 Edge Banister	1000*2200mm	4	set
4-7	护栏 Edge Banister	1000*1200mm	1	set
5-1	楼梯的栏杆 The Banister Of The Stairs	2376*1200mm	6	set
5-2	楼梯的栏杆 The Banister Of The Stairs	2376*1200mm	2	set
6-1	遮阳棚架 Awning Shelf	1040*2360mm	1	set
6-2	遮阳棚架 Awning Shelf	1840*2360mm	1	set
6-3	遮阳棚架 Awning Shelf	2340*2360mm	1	set

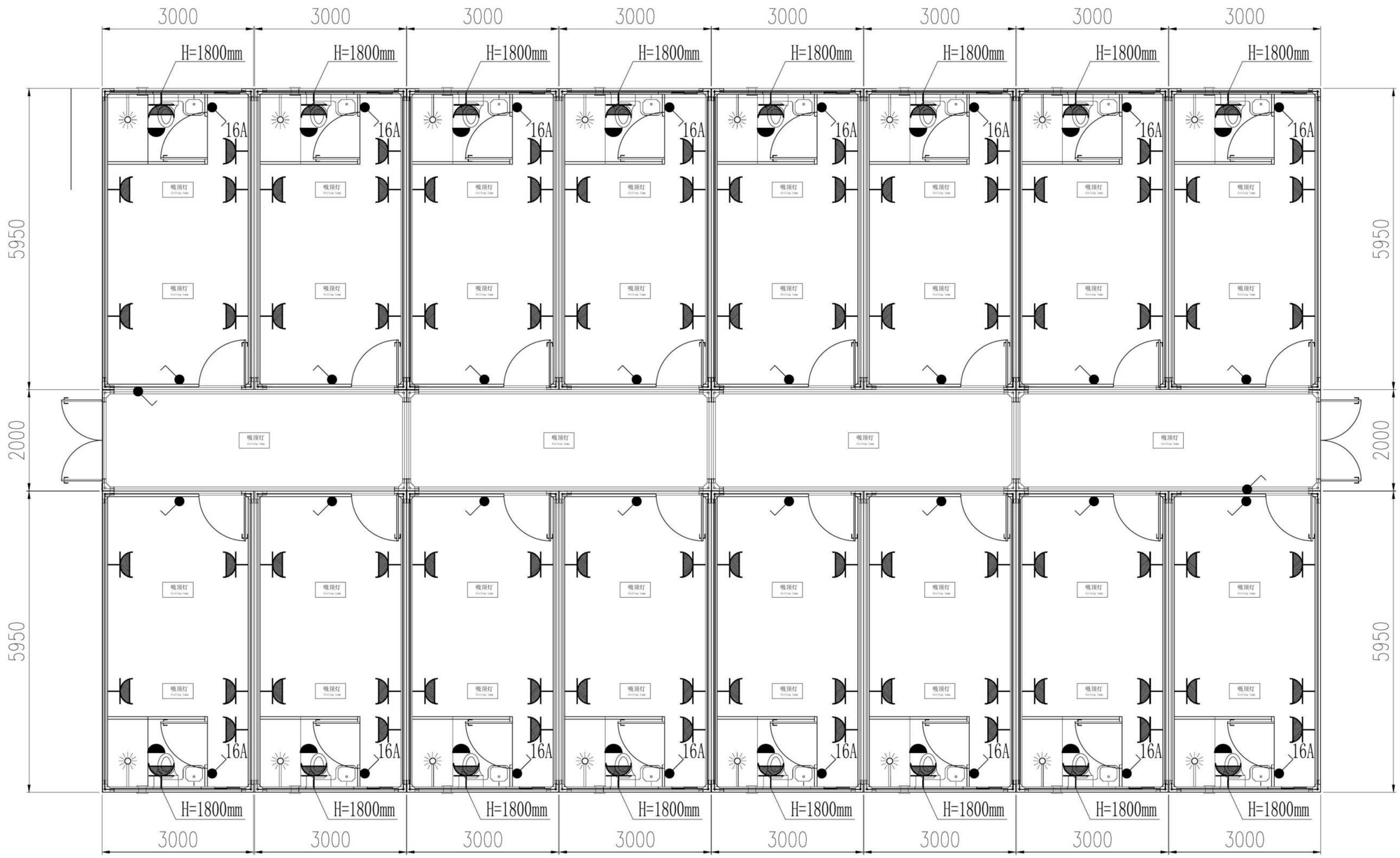

一层照明插座平面图

First Floor Lighting And Socket Layout

Bill of Material					
NO.	Legend	Item	Descriptiones	Quantity	Unit
1	吸顶灯	LED 吸顶灯 LED Ceiling Lamp		36	Set
2		LED 吸顶灯（内卫用） LED Ceiling Lamp (toilet)		16	Set
3		单联开关 Single Gang Switch	H=1200mm	32	Set
4		单联双控开关（过道） Single Gang Dual Control Switch(Corridor)	H=1200mm	2	Set
5		五孔插座 Five Hole Socket	H=300mm	80	Set
6	16A	16A空调插座 16A Socket	H=1800mm	16	Set

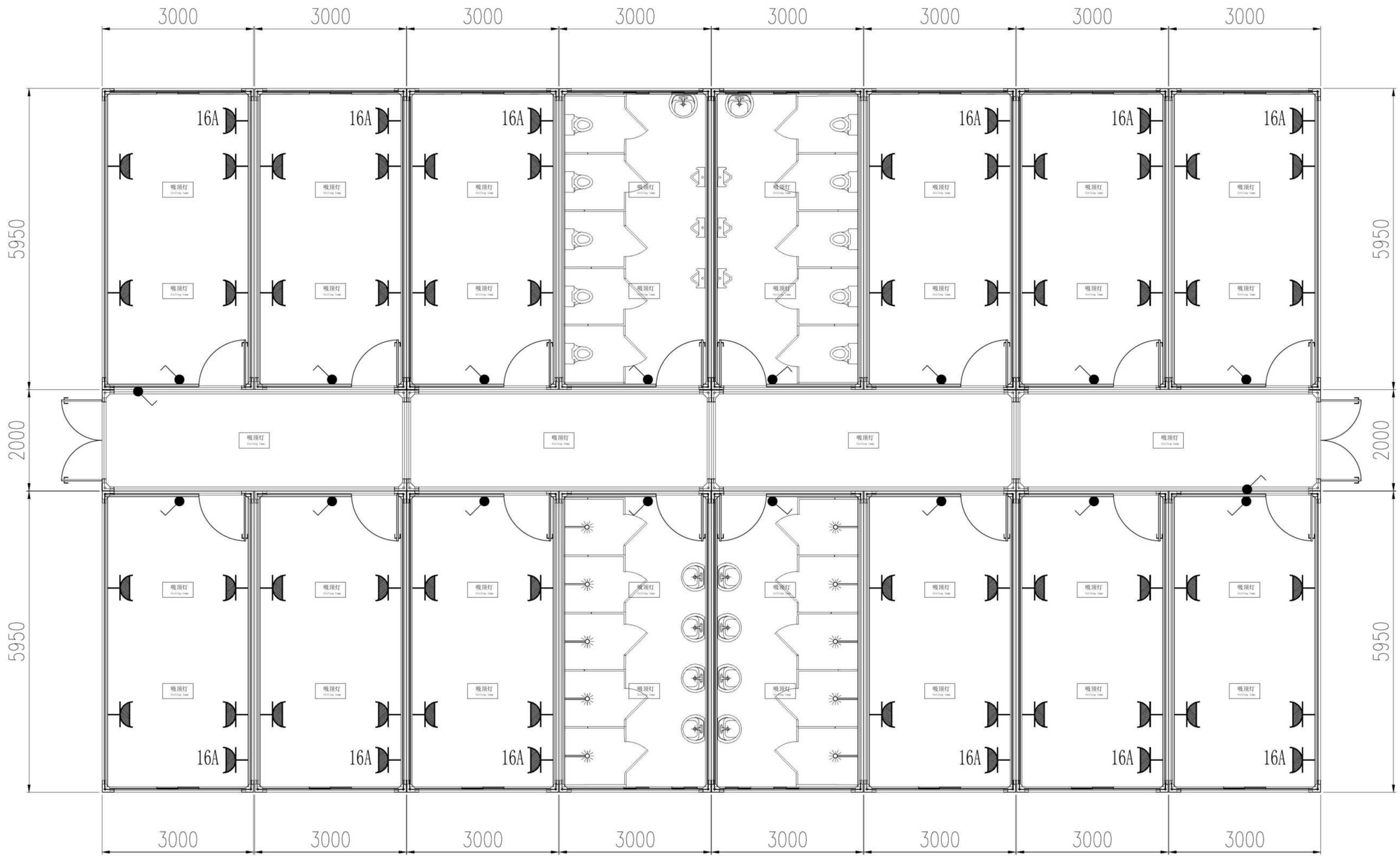

二层照明插座平面图

Second Floor Lighting And Socket Layout

Bill of Material

NO.	Legend	Item	Descriptiones	Quantity	Unit
1	吸顶灯	LED 吸顶灯 LED Ceiling Lamp		36	Set
2		单联开关 Single Gang Switch	H=1200mm	16	Set
3		单联双控开关（过道） Single Gang Dual Control Switch(Corridor)	H=1200mm	2	Set
4		五孔插座 Five Hole Socket	H=300mm	48	Set
5	16A	16A空调插座 16A Socket	H=1800mm	12	Set

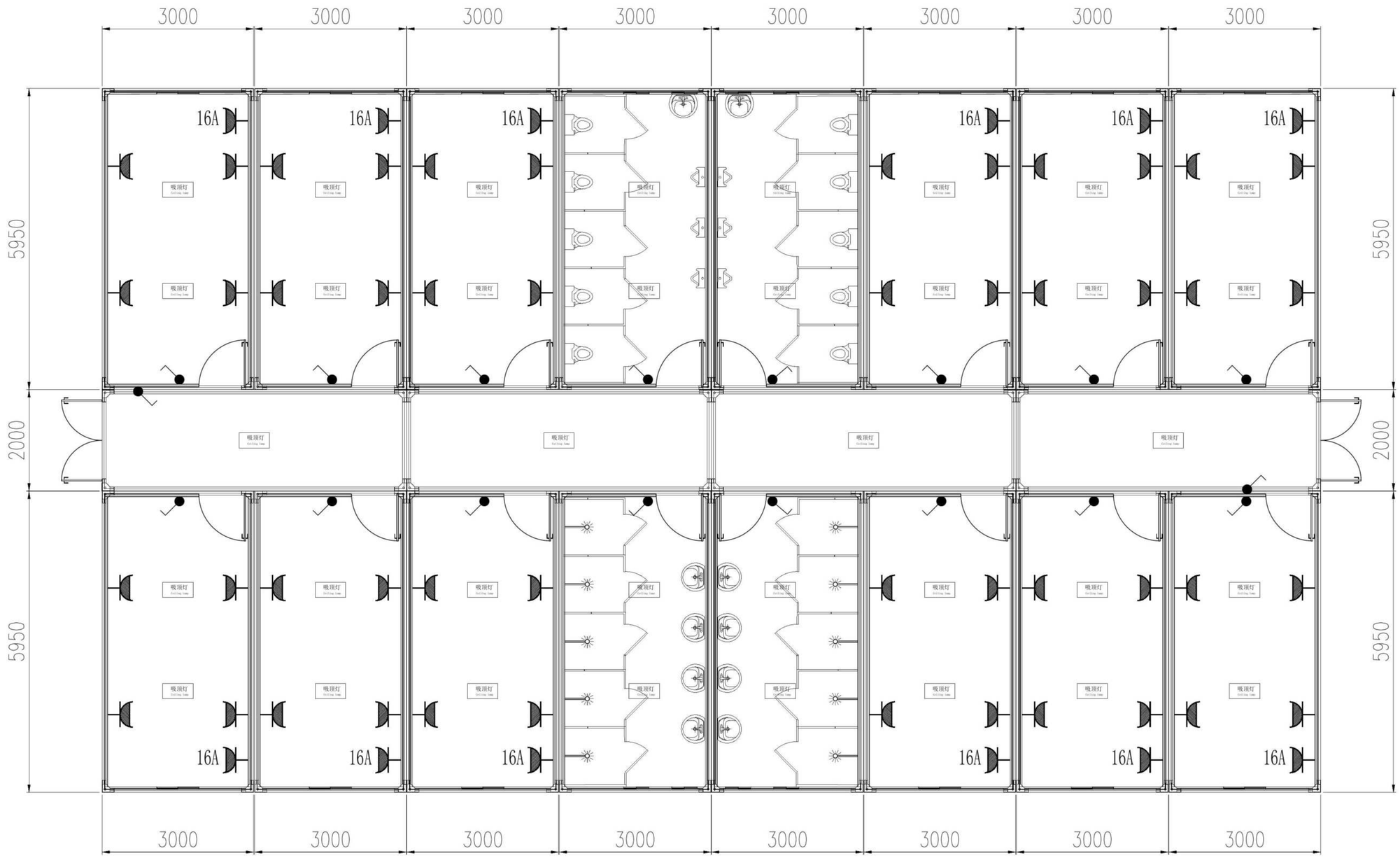

三层照明插座平面图

Third Floor Lighting And Socket Layout

Bill of Material

NO.	Legend	Item	Descriptiones	Quantity	Unit
1	吸顶灯	LED 吸顶灯 LED Ceiling Lamp		36	Set
2		单联开关 Single Gang Switch	H=1200mm	16	Set
3		单联双控开关（过道） Single Gang Dual Control Switch(Corridor)	H=1200mm	2	Set
4		五孔插座 Five Hole Socket	H=300mm	48	Set
5	16A	16A空调插座 16A Socket	H=1800mm	12	Set